09/08/99

WBS PROJECT: BP11.R013

CONTRACT: DK00427

See Sheet 1A For Index of Sheets
See Sheet 1B For Conventional Symbols

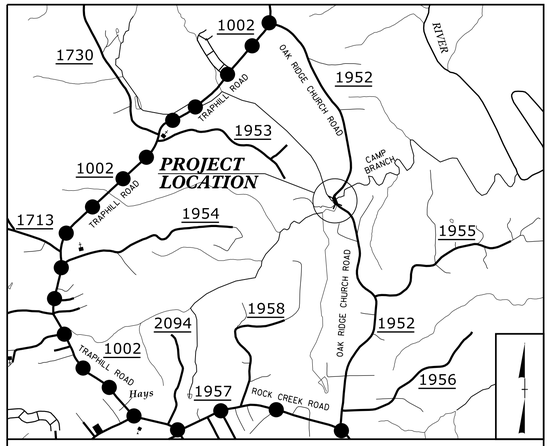

DETOUR

VICINITY MAP N.T.S

100% PLANS

STATE OF NORTH CAROLINA
DIVISION OF HIGHWAYS

WILKES COUNTY

STATE	STATE PROJECT REFERENCE NO.	SHEET NO.	TOTAL SHEETS
N.C.	BP11.R013	1	

STATE PROJ. NO.	F.A. PROJ. NO.	DESCRIPTION
BP11.R013.1	N/A	PE
BP11.R013.2	N/A	RW, UTIL.
BP11.R013.3	N/A	CONST.

LOCATION: REPLACEMENT OF BRIDGE 960280 OVER CAMP BRANCH ON SR 1952 (OAK RIDGE CHURCH ROAD)

TYPE OF WORK: GRADING, PAVING, DRAINAGE & STRUCTURE (BRIDGE)

NAD 83/NA 2011

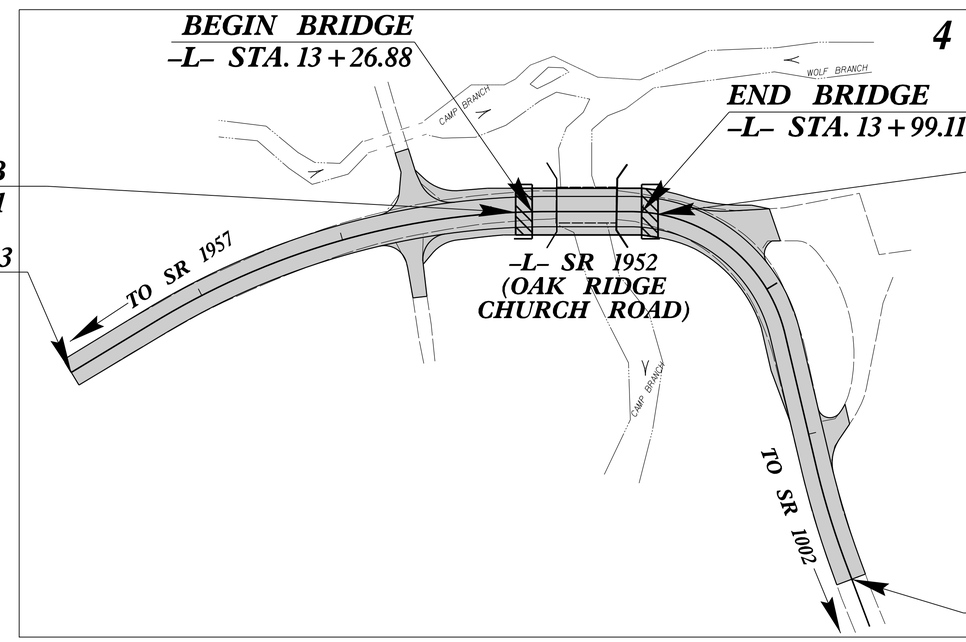

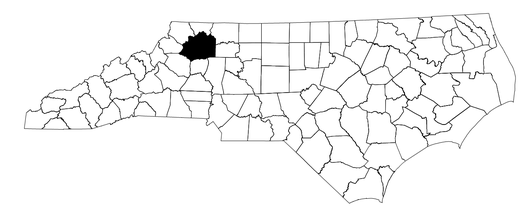

DOCUMENT NOT CONSIDERED FINAL UNLESS ALL SIGNATURES COMPLETED

THERE IS NO CONTROL OF ACCESS ON THIS PROJECT.

GRAPHIC SCALES

50 25 0 50 100
PLANS

50 25 0 50 100
PROFILE (HORIZONTAL)

10 5 0 10 20
PROFILE (VERTICAL)

DESIGN DATA

ADT 2025 = 820
ADT 2045 = 1225

T = 6 %

V = 30 MPH

FUNC CLASS =
LOCAL
SUBREGIONAL TIER

PROJECT LENGTH

LENGTH ROADWAY WBS PROJECT BP11.R013	=	0.119 MILES
LENGTH STRUCTURE WBS PROJECT BP11.R013	=	0.014 MILES
TOTAL LENGTH WBS PROJECT BP11.R013	=	0.133 MILES

PREPARED IN THE OFFICE OF:

RS&H
1520 SOUTH BOULEVARD, SUITE 200
CHARLOTTE, NC 28203
NC FIRM LICENSE No: F-0493

FOR THE NORTH CAROLINA DEPARTMENT OF TRANSPORTATION

2024 STANDARD SPECIFICATIONS

RIGHT OF WAY DATE:
MAY 23, 2024

LETTING DATE:
JUNE 19, 2025

BROOKE PARKER, PE
PROJECT ENGINEER

STEPHEN KRAWCZYK, EI
PROJECT DESIGN ENGINEER

ROB WEISZ, PE
NCDOT CONTACT

HYDRAULICS ENGINEER

SEAL
NORTH CAROLINA PROFESSIONAL ENGINEER ALEXANDER R. VINSON

4/16/2025
P.E.
SIGNATURE:

ROADWAY DESIGN ENGINEER

SEAL
NORTH CAROLINA PROFESSIONAL ENGINEER BROOKE E. PARKER

4/16/2025
P.E.
SIGNATURE:

STATE OF NORTH CAROLINA DEPARTMENT OF TRANSPORTATION

16-APR-2025 13:08
R:\Roadway\Proj\Wilkes280_Ray_tsh.dgn
KrawczyS

8/17/99

PROJECT REFERENCE NO.	SHEET NO.
BPIIJR013	1A

ROADWAY DESIGN ENGINEER

NORTH CAROLINA PROFESSIONAL SEAL 044543 ENGINEER BROOKE E. PARKER

4/11/2025

DOCUMENT NOT CONSIDERED FINAL UNLESS ALL SIGNATURES COMPLETED

RS&H 1520 SOUTH BOULEVARD, SUITE 200
CHARLOTTE, NC 28203
NC FIRM LICENSE No: F-0493

INDEX OF SHEETS

GENERAL NOTES

GENERAL NOTES: 2024 SPECIFICATIONS
EFFECTIVE: 01-16-2024
REVISED:

GRADE LINE:
GRADING AND SURFACING:

THE GRADE LINES SHOWN DENOTE THE FINISHED ELEVATION OF THE PROPOSED SURFACING AT GRADE POINTS SHOWN ON THE TYPICAL SECTIONS. GRADE LINES MAY BE ADJUSTED AT THEIR BEGINNING AND ENDING AND AT STRUCTURES AS DIRECTED BY THE ENGINEER IN ORDER TO SECURE A PROPER TIE-IN.

CLEARING:

CLEARING ON THIS PROJECT SHALL BE PERFORMED TO THE LIMITS ESTABLISHED BY METHOD II.

SUPERELEVATION:

ALL CURVES ON THIS PROJECT SHALL BE SUPERELEVATED IN ACCORDANCE WITH STD. NO. 225.04 USING THE RATE OF SUPERELEVATION AND RUNOFF SHOWN ON THE PLANS. SUPERELEVATION IS TO BE REVOLVED ABOUT THE GRADE POINTS SHOWN ON THE TYPICAL SECTIONS.

SHOULDER CONSTRUCTION:

ASPHALT, EARTH, AND CONCRETE SHOULDER CONSTRUCTION ON THE HIGH SIDE OF SUPERELEVATED CURVES SHALL BE IN ACCORDANCE WITH STD. NO. 560.01

SUBSURFACE DRAINS:

SUBSURFACE DRAINS SHALL BE CONSTRUCTED IN ACCORDANCE WITH STD. NO. 815.02 AT LOCATIONS DIRECTED BY THE ENGINEER.

SHOULDER DRAINS:

SHOULDER DRAINS SHALL BE CONSTRUCTED IN ACCORDANCE WITH STD. NO. 816.02 AND DETAILS IN PLANS AT LOCATIONS DIRECTED BY THE ENGINEER.

DRIVEWAYS:

DRIVEWAYS SHALL BE CONSTRUCTED IN ACCORDANCE WITH STD. 848.02 USING 3 FOOT RADII OR RADII AS SHOWN ON THE PLANS. LOCATIONS OF DRIVES WILL BE AS SHOWN ON THE PLANS OR AS DIRECTED BY THE ENGINEER.

GUARDRAIL:

THE GUARDRAIL LOCATIONS SHOWN ON THE PLANS MAY BE ADJUSTED DURING CONSTRUCTION AS DIRECTED BY THE ENGINEER. THE CONTRACTOR SHOULD CONSULT WITH THE ENGINEER PRIOR TO ORDERING GUARDRAIL MATERIAL.

END BENTS:

THE ENGINEER SHALL CHECK THE STRUCTURE END BENT PLANS, DETAILS, AND CROSS-SECTION PRIOR TO SETTING OF THE SLOPE STAKES FOR THE EMBANKMENT OR EXCAVATION APPROACHING A BRIDGE.

UTILITIES:

UTILITY OWNERS ON THIS PROJECT ARE WILKES COMMUNICATION.

DUKE ENERGY, BLUE RIDGE WATER ASSOCIATION, SPECTRUM

ANY RELOCATION OF EXISTING UTILITIES WILL BE ACCOMPLISHED BY OTHERS, EXCEPT AS SHOWN ON THE PLANS.

RIGHT-OF-WAY MARKERS:

ALL RIGHT-OF-WAY MARKERS ON THIS PROJECT SHALL BE PLACED BY OTHERS.

STANDARD DRAWINGS

EFF. 01-16-2024
REV.

2024 ROADWAY ENGLISH STANDARD DRAWINGS

The following Roadway Standards as appear in "Roadway Standard Drawings" Contracts Standards and Development Unit - N. C. Department of Transportation - Raleigh, N. C., Dated January 16, 2024 are applicable to this project and by reference hereby are considered a part of these plans:

STD.NO.	TITLE
DIVISION 2 - EARTHWORK	
200.02	Method of Clearing - Method II
225.02	Guide for Grading Subgrade - Secondary and Local
225.04	Method of Obtaining Superelevation - Two Lane Pavement
275.01	Rock Plating
DIVISION 3 - PIPE CULVERTS	
300.01	Method of Pipe Installation (Use Details in Lieu of Standards for Sheets 1 and 2 of 2)
310.10	Driveway Pipe Construction
DIVISION 4 - MAJOR STRUCTURES	
423.01	Bridge Approach Fills - Type 1 Approach Fill for Bridge Abutment
DIVISION 5 - SUBGRADE, BASES AND SHOULDERS	
560.01	Method of Shoulder Construction - High Side of Superelevated Curve - Method I
DIVISION 8 - INCIDENTALS	
815.02	Subsurface Drain
840.00	Concrete Base Pad for Drainage Structures
840.29	Frames and Narrow Slot Flat Grates
840.35	Traffic Bearing Grated Drop Inlet - for Cast Iron Double Frame and Grates
840.46	Traffic Bearing Precast Drainage Structure
848.02	Driveway Turnout - Radius Type
862.01	Guardrail Placement (Use Details in Lieu of Standards for Sheets 4, 6, 12, and 14 of 15)
862.02	Guardrail Installation
862.03	Structure Anchor Units (Use Detail in Lieu of Standard for Sheet 8 of 9)
876.02	Guide for Rip Rap at Pipe Outlets

08-APR-2025 09:31
R:\Roadway\Proj\Wilkes280_Rdy_tsh.dgn
kcowgill

9/10/2021

PROJECT REFERENCE NO.	SHEET NO.
BP11.R013	1B

STATE OF NORTH CAROLINA, DIVISION OF HIGHWAYS

CONVENTIONAL PLAN SHEET SYMBOLS

Note: Not to Scale

BOUNDARIES AND PROPERTY:

- State Line
- County Line
- Township Line
- City Line
- Reservation Line
- Property Line
- Existing Iron Pin (EIP) — EIP
- Computed Property Corner
- Existing Concrete Monument (ECM) — ECM
- Parcel/Sequence Number — 123
- Existing Fence Line
- Proposed Woven Wire Fence
- Proposed Chain Link Fence
- Proposed Barbed Wire Fence
- Existing Wetland Boundary — WLB
- Proposed Wetland Boundary — WLB
- Existing Endangered Animal Boundary — EAB
- Existing Endangered Plant Boundary — EPB
- Existing Historic Property Boundary — HPB
- Known Contamination Area: Soil — S
- Potential Contamination Area: Soil — S
- Known Contamination Area: Water — W
- Potential Contamination Area: Water — W
- Contaminated Site: Known or Potential

BUILDINGS AND OTHER CULTURE:

- Gas Pump Vent or U/G Tank Cap
- Sign — S
- Well — W
- Small Mine
- Foundation
- Area Outline
- Cemetery
- Building
- School
- Church
- Dam

HYDROLOGY:

- Stream or Body of Water
- Hydro, Pool or Reservoir
- Jurisdictional Stream — JS
- Buffer Zone 1 — BZ 1
- Buffer Zone 2 — BZ 2
- Flow Arrow
- Disappearing Stream
- Spring
- Wetland
- Proposed Lateral, Tail, Head Ditch — FLOW
- False Sump

RAILROADS:

- Standard Gauge — CSX TRANSPORTATION
- RR Signal Milepost — MILEPOST 35
- Switch — SWITCH
- RR Abandoned
- RR Dismantled

RIGHT OF WAY & PROJECT CONTROL:

- Primary Horiz Control Point
- Primary Horiz and Vert Control Point
- Secondary Horiz and Vert Control Point
- Vertical Benchmark
- Existing Right of Way Monument
- Proposed Right of Way Monument (Rebar and Cap)
- Proposed Right of Way Monument (Concrete)
- Existing Permanent Easement Monument
- Proposed Permanent Easement Monument (Rebar and Cap)
- Existing C/A Monument
- Proposed C/A Monument (Rebar and Cap)
- Proposed C/A Monument (Concrete)
- Existing Right of Way Line
- Proposed Right of Way Line — RW
- Existing Control of Access Line — CA
- Proposed Control of Access Line — CA
- Proposed ROW and CA Line — RW CA
- Existing Easement Line — E
- Proposed Temporary Construction Easement — E
- Proposed Temporary Drainage Easement — TDE
- Proposed Permanent Drainage Easement — PDE
- Proposed Permanent Drainage/Utility Easement — DUE
- Proposed Permanent Utility Easement — PUE
- Proposed Temporary Utility Easement — TUE
- Proposed Aerial Utility Easement — AUE

ROADS AND RELATED FEATURES:

- Existing Edge of Pavement
- Existing Curb
- Proposed Slope Stakes Cut — C
- Proposed Slope Stakes Fill — F
- Proposed Curb Ramp — CR
- Existing Metal Guardrail
- Proposed Guardrail
- Existing Cable Guiderail
- Proposed Cable Guiderail
- Equality Symbol
- Pavement Removal

VEGETATION:

- Single Tree
- Single Shrub
- Hedge
- Woods Line
- Orchard
- Vineyard — Vineyard

EXISTING STRUCTURES:

MAJOR:

- Bridge, Tunnel or Box Culvert — CONC
- Bridge Wing Wall, Head Wall and End Wall — CONC WW

MINOR:

- Head and End Wall — CONC HW
- Pipe Culvert
- Footbridge
- Drainage Box: Catch Basin, DI or JB — CB
- Paved Ditch Gutter
- Storm Sewer Manhole — S
- Storm Sewer — S

UTILITIES:

** SUE – Subsurface Utility Engineering*
LOS – Level of Service – A,B,C or D (Accuracy)

POWER:

- Existing Power Pole
- Proposed Power Pole
- Existing Joint Use Pole
- Proposed Joint Use Pole
- Power Manhole — P
- Power Line Tower
- Power Transformer
- U/G Power Cable Hand Hole — HH
- H–Frame Pole
- U/G Power Line Test Hole (SUE – LOS A)*
- U/G Power Line (SUE – LOS B)* — P
- U/G Power Line (SUE – LOS C)* — P
- U/G Power Line (SUE – LOS D)* — P

TELEPHONE:

- Existing Telephone Pole
- Proposed Telephone Pole
- Telephone Manhole — T
- Telephone Pedestal — T
- Telephone Cell Tower
- U/G Telephone Cable Hand Hole — HH
- U/G Telephone Test Hole (SUE – LOS A)*
- U/G Telephone Cable (SUE – LOS B)* — T
- U/G Telephone Cable (SUE – LOS C)* — T
- U/G Telephone Cable (SUE – LOS D)* — T
- U/G Telephone Conduit (SUE – LOS B)* — TC
- U/G Telephone Conduit (SUE – LOS C)* — TC
- U/G Telephone Conduit (SUE – LOS D)* — TC
- U/G Fiber Optics Cable (SUE – LOS B)* — T FO
- U/G Fiber Optics Cable (SUE – LOS C)* — T FO
- U/G Fiber Optics Cable (SUE – LOS D)* — T FO

WATER:

- Water Manhole — W
- Water Meter
- Water Valve
- Water Hydrant
- U/G Water Line Test Hole (SUE – LOS A)*
- U/G Water Line (SUE – LOS B)* — W
- U/G Water Line (SUE – LOS C)* — W
- U/G Water Line (SUE – LOS D)* — W
- Above Ground Water Line — A/G Water

TV:

- TV Pedestal — C
- TV Tower
- U/G TV Cable Hand Hole — HH
- U/G TV Test Hole (SUE – LOS A)*
- U/G TV Cable (SUE – LOS B)* — TV
- U/G TV Cable (SUE – LOS C)* — TV
- U/G TV Cable (SUE – LOS D)* — TV
- U/G Fiber Optic Cable (SUE – LOS B)* — TV FO
- U/G Fiber Optic Cable (SUE – LOS C)* — TV FO
- U/G Fiber Optic Cable (SUE – LOS D)* — TV FO

GAS:

- Gas Valve
- Gas Meter
- U/G Gas Line Test Hole (SUE – LOS A)*
- U/G Gas Line (SUE – LOS B)* — G
- U/G Gas Line (SUE – LOS C)* — G
- U/G Gas Line (SUE – LOS D)* — G
- Above Ground Gas Line — A/G Gas

SANITARY SEWER:

- Sanitary Sewer Manhole
- Sanitary Sewer Cleanout
- U/G Sanitary Sewer Line — SS
- Above Ground Sanitary Sewer — A/G Sanitary Sewer
- SS Force Main Line Test Hole (SUE – LOS A)*
- SS Force Main Line (SUE – LOS B)* — FSS
- SS Force Main Line (SUE – LOS C)* — FSS
- SS Force Main Line (SUE – LOS D)* — FSS

MISCELLANEOUS:

- Utility Pole
- Utility Pole with Base
- Utility Located Object
- Utility Traffic Signal Box — S
- Utility Unknown U/G Line (SUE – LOS B)* — ?UTL
- U/G Tank; Water, Gas, Oil
- Underground Storage Tank, Approx. Loc.
- A/G Tank; Water, Gas, Oil
- Geoenvironmental Boring
- Abandoned According to Utility Records — AATUR
- End of Information — E.O.I.

8/17/99

FINAL PAVEMENT SCHEDULE

C1	PROP. APPROX. 3″ ASPHALT CONCRETE SURFACE COURSE, TYPE S9.5B, AT AN AVERAGE RATE OF 165 LBS. PER SQ. YD. IN EACH OF TWO LAYERS.
C2	PROP. VAR. DEPTH ASPHALT CONCRETE SURFACE COURSE, TYPE S9.5B, AT AN AVERAGE RATE OF 110 LBS. PER SQ. YD. PER 1″ DEPTH. TO BE PLACED IN LAYERS NOT LESS THAN 1″ IN DEPTH OR GREATER THAN 1.5″ IN DEPTH.
E1	PROP. APPROX. 4″ ASPHALT CONCRETE BASE COURSE, TYPE B25.0C, AT AN AVERAGE RATE OF 456 LBS. PER SQ. YD.
R1	SHOULDER BERM GUTTER
T	EARTH MATERIAL

NOTE: ALL PAVEMENT SLOPES ARE 1:1 UNLESS NOTED OTHERWISE

BRIDGE NO. 960280

PROJECT REFERENCE NO.	SHEET NO.
BP11.R013	2A-1
R/W SHEET NO.	
ROADWAY DESIGN ENGINEER	PAVEMENT DESIGN ENGINEER
4/11/2025	4/11/2025

DOCUMENT NOT CONSIDERED FINAL UNLESS ALL SIGNATURES COMPLETED

RS&H
1520 SOUTH BOULEVARD, SUITE 200
CHARLOTTE, NC 28203
NC FIRM LICENSE No: F-0493

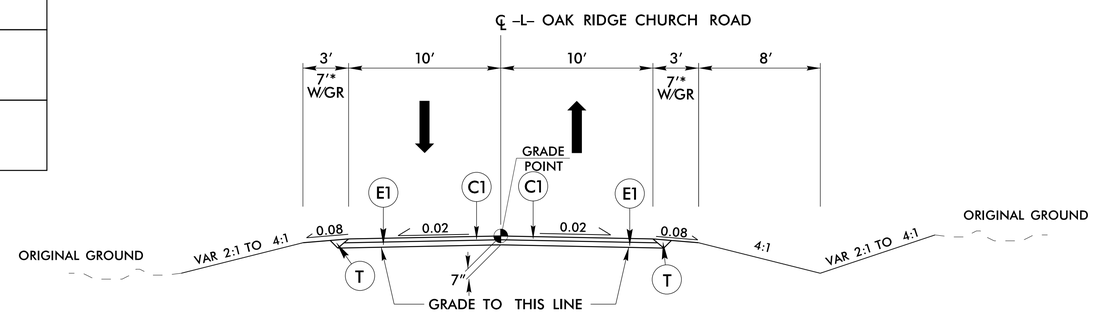

TYPICAL SECTION NO. 1

–L– STA. 10+00.00 TO –L– STA. 13+26.88 (BEGIN BRIDGE)
–L– STA. 13+99.11 (END BRIDGE) TO –L– STA. 17+00.00

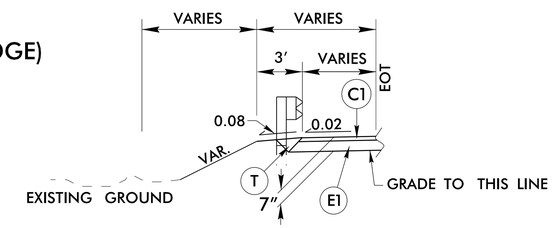

*SHOULDER DETAIL

USE IN CONJUNCTION WITH GUARDRAIL ON –L–
SEE CROSS SECTIONS

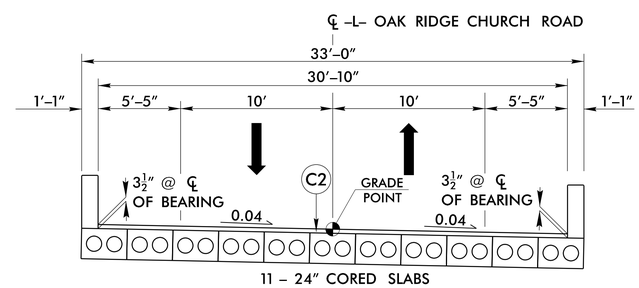

TYPICAL SECTION NO. 2

–L– STA. 13+26.88 TO –L– STA. 13+99.11

*NOTE: SEE STRUCTURE PLANS FOR STRUCTURE CONSTRUCTION DETAILS

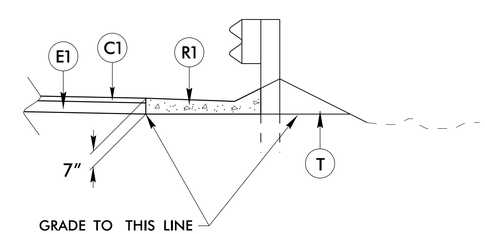

SHOULDER BERM GUTTER DETAIL

–L– STA. 13+06.00 TO –L– STA. 13+15.42 (RT)
–L– STA. 14+12.76 TO –L– STA. 15+11.00 (RT)

09-APR-2025 08:39
R:\Roadway\Proj\Wilkes280_Rdy_typ.dgn
KFOWZAS

PROJECT REFERENCE NO.	SHEET NO.
BP11.R013	2C-1

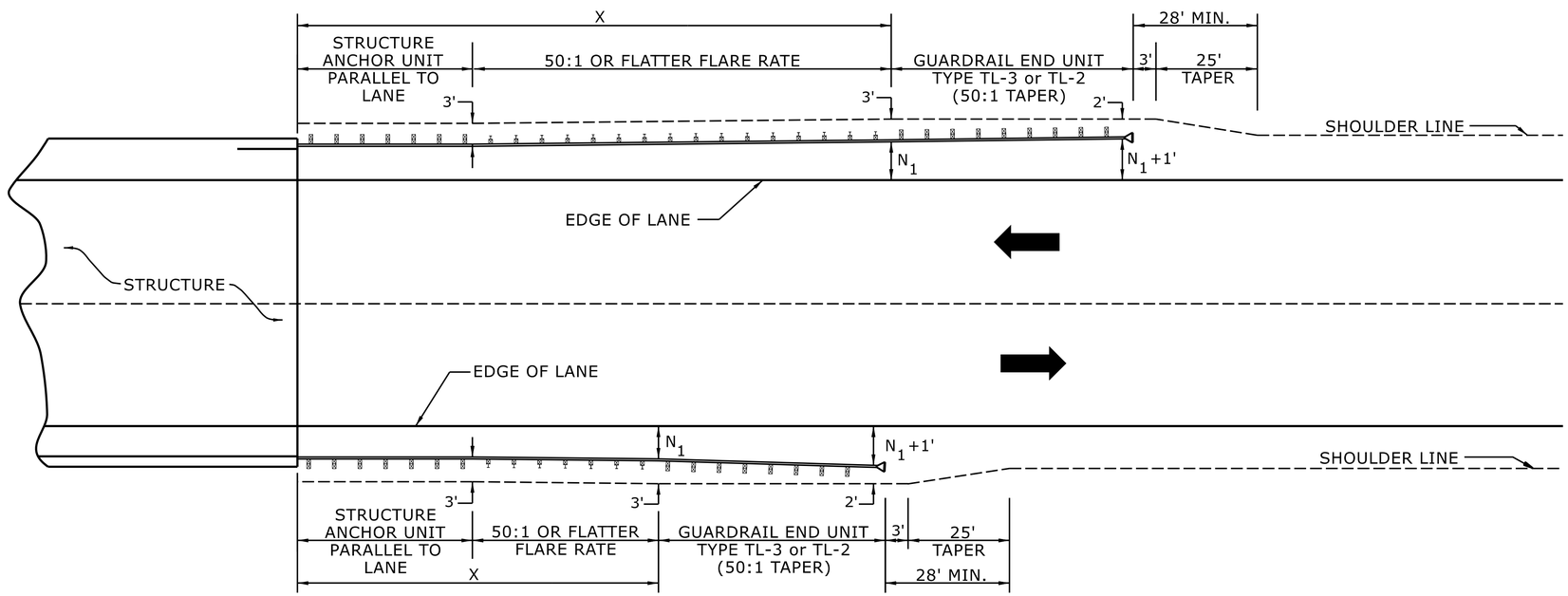

USE FLARE RATE AS THE CONTROL IF THE "N_1" DISTANCE IS NOT OBTAINED.
("N_1" IS BASED ON SHOULDER WIDTHS IN THE ROADWAY DESIGN MANUAL)

SEE STD. 862.03 FOR STRUCTURE ANCHOR UNITS

FOR POSTED SPEEDS ≥ 45MPH USE GREU TYPE TL-3
FOR POSTED SPEEDS < 45MPH USE GREU TYPE TL-2

GUARDRAIL LENGTH OF NEED (X) IS CALCULATED BASED ON THE AASHTO ROADSIDE DESIGN GUIDE.

LENGTHS AND OFFSETS FOR PROPOSED GUARDRAIL AT TWO LANE - TWO WAY LOCATIONS

STATE OF NORTH CAROLINA
DEPT. OF TRANSPORTATION
DIVISION OF HIGHWAYS
RALEIGH, N.C.

ROADWAY DETAIL DRAWING FOR
GUARDRAIL PLACEMENT

SHEET 4 OF 15

862D01

NORTH CAROLINA PROFESSIONAL SEAL 033144 ENGINEER NICOLE M. HACKLER
Signed by:
Date: 4/11/2025
4/11/2025

DOCUMENT NOT CONSIDERED FINAL UNLESS ALL SIGNATURES COMPLETED

CONTRACTS STANDARDS AND DEVELOPMENT UNIT
Office 919-707-6950 FAX 919-250-4119

SEE TITLE BLOCK

ORIGINAL BY: S.CALHOUN DATE: 7-25-2024
MODIFIED BY: DATE:
CHECKED BY: DATE:
FILE SPEC.:

PROJECT REFERENCE NO.	SHEET NO.
BP11.R013	2C-2

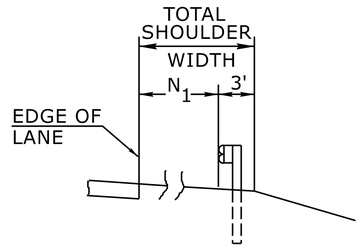

FILL SECTION

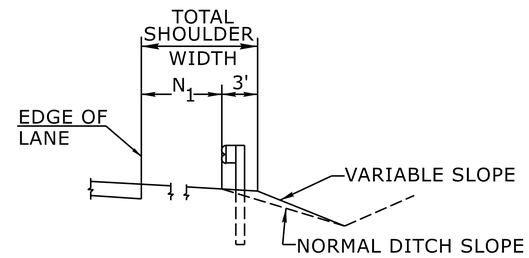

CUT SECTION

"N_1"= DISTANCE FROM EDGE OF LANE TO FACE OF GUARDRAIL WHERE GUARDRAIL IS PARALLEL TO LANE.

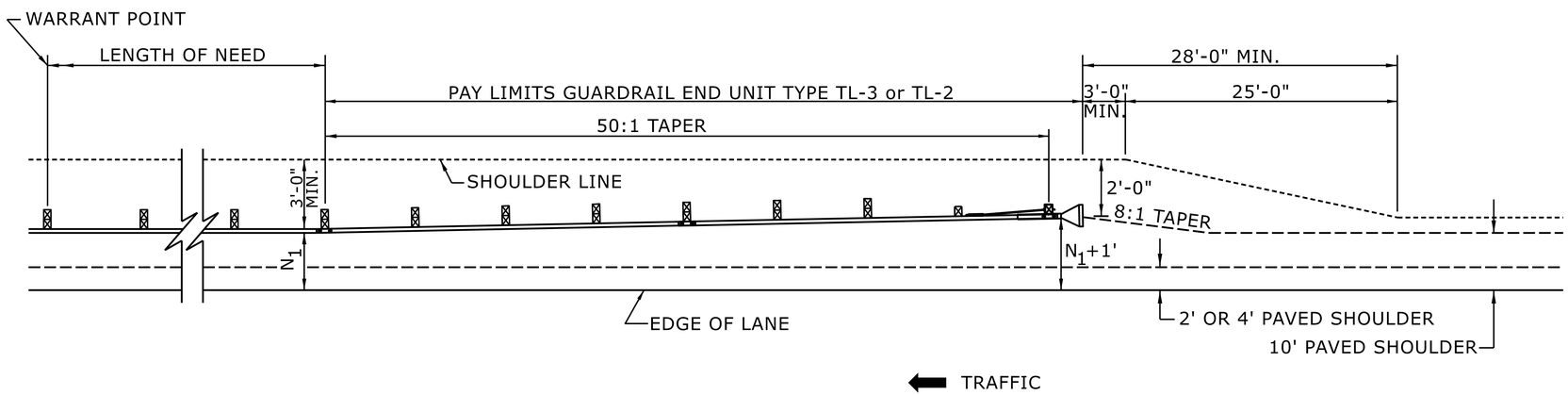

FOR POSTED SPEEDS ≥ 45mph USE GREU TYPE TL-3
FOR POSTED SPEEDS < 45mph USE GREU TYPE TL-2

DETAIL OF BEGINNING OF GUARDRAIL IN CUT OR FILL SECTION

STATE OF
NORTH CAROLINA
DEPT. OF TRANSPORTATION
DIVISION OF HIGHWAYS
RALEIGH, N.C.

ROADWAY DETAIL DRAWING FOR
GUARDRAIL PLACEMENT

4/11/2025

SHEET 6 OF 15

862D01

DOCUMENT NOT CONSIDERED FINAL
UNLESS ALL SIGNATURES COMPLETED

CONTRACTS STANDARDS AND DEVELOPMENT UNIT
Office 919-707-6950 FAX 919-250-4119

SEE TITLE BLOCK

ORIGINAL BY: S.CALHOUN DATE: 7-25-2024
MODIFIED BY: DATE:
CHECKED BY: DATE:
FILE SPEC.:

PROJECT REFERENCE NO.	SHEET NO.
BP11.R013	2D-1

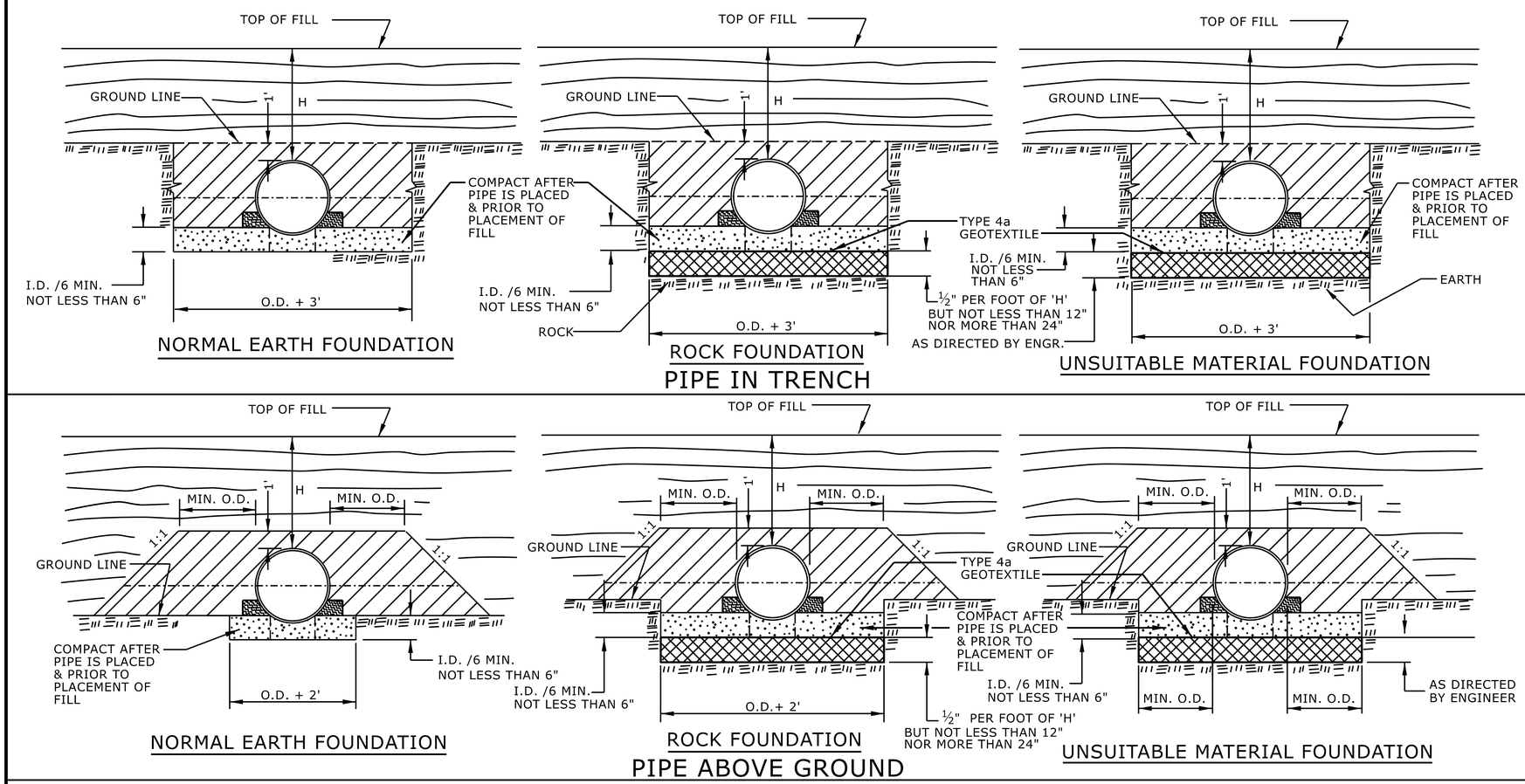

GENERAL NOTES:

I.D. = THE MAXIMUM HORIZONTAL INSIDE DIAMETER DIMENSION.

O.D. = THE MAXIMUM HORIZONTAL OUTSIDE DIAMETER DIMENSION.

H = THE FILL HEIGHT MEASURED VERTICALLY AT ANY POINT ALONG THE PIPE FROM THE TOP OF THE PIPE TO THE TOP OF THE EMBANKMENT AT THAT POINT.

APPROVED SUITABLE LOCAL MATERIAL.

TAKE CARE TO FULLY COMPACT HAUNCH ZONE OF PIPE BACKFILL.

LOOSELY PLACED SELECT MATERIAL CLASS III OR CLASS II, TYPE 1 FOR PIPE BEDDING. LEAVE SECTION DIRECTLY BENEATH PIPE UNCOMPACTED AS PIPE SEATING AND BACKFILL WILL ACCOMPLISH COMPACTION.

DO NOT OPERATE HEAVY EQUIPMENT OVER ANY PIPE CULVERT UNTIL THE PIPE CULVERT HAS BEEN PROPERLY BACKFILLED AND COVERED WITH AT LEAST 3 FEET OF APPROVED MATERIAL.

REFER TO NCDOT PIPE MATERIAL SELECTION GUIDE AND STANDARD SPECIFICATIONS FOR ALLOWABLE PIPE FILL HEIGHTS AND PIPE SPECIFICATIONS.

SPRINGLINE OF PIPE

SELECT BACKFILL MATERIAL CLASS III OR CLASS II, TYPE 1 ABOVE AND BELOW SPRINGLINE.

UNDISTURBED EARTH MATERIAL

SELECT MATERIAL CLASS V OR VI FOR FOUNDATION CONDITIONING. ENCAPSULATE WITH TYPE IV GEOTEXTILE AS DIRECTED BY THE ENGINEER.

STATE OF NORTH CAROLINA
DEPT. OF TRANSPORTATION
DIVISION OF HIGHWAYS
RALEIGH, N.C.

ROADWAY DETAIL DRAWING FOR

METHOD OF PIPE INSTALLATION

FLEXIBLE PIPE

SHEET 1 OF 2

300.01

DOCUMENT NOT CONSIDERED FINAL UNLESS ALL SIGNATURES COMPLETED

CONTRACTS STANDARDS AND DEVELOPMENT UNIT
Office 919-707-6950 FAX 919-250-4119

SEE TITLE BLOCK

ORIGINAL BY: S.CALHOUN DATE: 7-25-2024
MODIFIED BY: DATE:
CHECKED BY: DATE:
FILE SPEC.:

PROJECT REFERENCE NO.	SHEET NO.
BP11.R013	2D-2

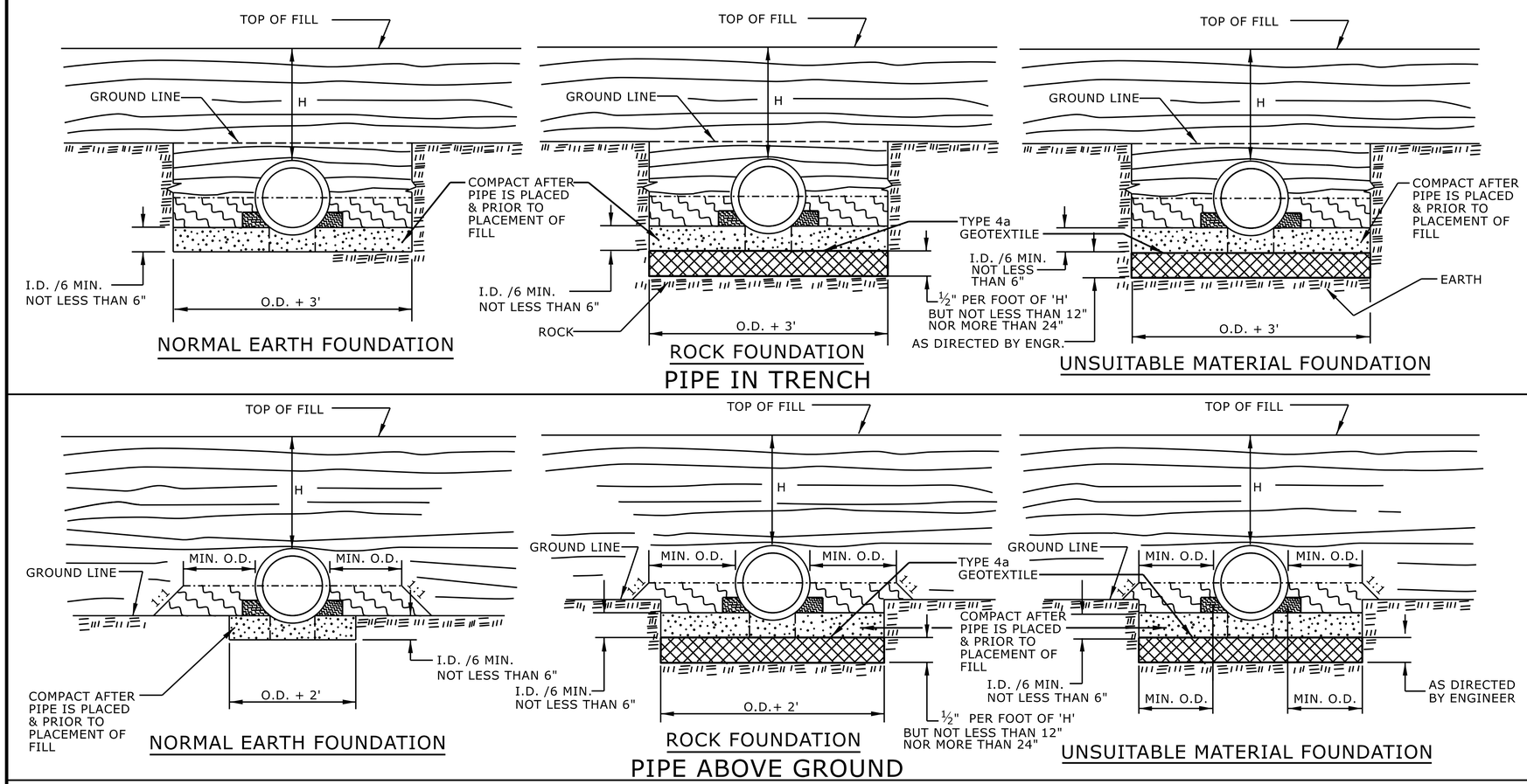

GENERAL NOTES:

I.D. = THE MAXIMUM HORIZONTAL INSIDE DIAMETER DIMENSION.

O.D. = THE MAXIMUM HORIZONTAL OUTSIDE DIAMETER DIMENSION.

H = THE FILL HEIGHT MEASURED VERTICALLY AT ANY POINT ALONG THE PIPE FROM THE TOP OF THE PIPE TO THE TOP OF THE EMBANKMENT AT THAT POINT.

APPROVED SUITABLE LOCAL MATERIAL.

TAKE CARE TO FULLY COMPACT HAUNCH ZONE OF PIPE BACKFILL.

LOOSELY PLACED SELECT MATERIAL CLASS III OR CLASS II, TYPE 1 FOR PIPE BEDDING. LEAVE SECTION DIRECTLY BENEATH PIPE UNCOMPACTED AS PIPE SEATING AND BACKFILL WILL ACCOMPLISH COMPACTION.

DO NOT OPERATE HEAVY EQUIPMENT OVER ANY PIPE CULVERT UNTIL THE PIPE CULVERT HAS BEEN PROPERLY BACKFILLED AND COVERED WITH AT LEAST 3 FEET OF APPROVED MATERIAL.

REFER TO NCDOT PIPE MATERIAL SELECTION GUIDE AND STANDARD SPECIFICATIONS FOR ALLOWABLE PIPE FILL HEIGHTS AND PIPE SPECIFICATIONS.

SPRINGLINE OF PIPE

SELECT BACKFILL MATERIAL CLASS III OR CLASS II, BELOW SPRINGLINE.

UNDISTURBED EARTH MATERIAL

SELECT MATERIAL CLASS V OR VI FOR FOUNDATION CONDITIONING. ENCAPSULATE WITH TYPE IV GEOTEXTILE AS DIRECTED BY THE ENGINEER.

STATE OF NORTH CAROLINA
DEPT. OF TRANSPORTATION
DIVISION OF HIGHWAYS
RALEIGH, N.C.

ROADWAY DETAIL DRAWING FOR
METHOD OF PIPE INSTALLATION
RIGID PIPE

NORTH CAROLINA PROFESSIONAL SEAL 033144 ENGINEER NICOLE M. HACKLEY
DocuSigned by: 5884323D3A1640...
4/11/2025

SHEET 2 OF 2
300.01

DOCUMENT NOT CONSIDERED FINAL UNLESS ALL SIGNATURES COMPLETED

CONTRACTS STANDARDS AND DEVELOPMENT UNIT
Office 919-707-6950 FAX 919-250-4119

SEE TITLE BLOCK

ORIGINAL BY: S.CALHOUN DATE: 7-25-2024
MODIFIED BY: DATE:
CHECKED BY: DATE:
FILE SPEC.:

12/06/07

COMPUTED BY:	SGK	DATE:	3/6/2025
CHECKED BY:	BEP	DATE:	3/6/2025

STATE OF NORTH CAROLINA
DIVISION OF HIGHWAYS

PROJECT REFERENCE NO.	SHEET NO.
BP11.R013	3B-1

SUMMARY OF EARTHWORK

STATION	STATION	UNCL. EXCAV. (CY)	UNDERCUT (CY)	EMBANK. +% (CY)	BORROW (CY)	WASTE (CY)
-L- 10+00.00	-L- 13+26.88 (BR)	143		658	515	
-L- 13+99.11 (BR)	-L- 17+00.00	365		477	112	
PROJECT TOTALS:		508		1,135	627	
EST. 5% TO REPLACE SOIL IN BORROW PIT					31	
GRAND TOTALS:		508		1,135	658	
SAY:		540			700	

NOTE: EARTHWORK QUANTITIES ARE CALCULATED BY THE ROADWAY DESIGNER. THESE EARTHWORK QUANTITIES ARE BASED IN PART ON SUBSURFACE DATA PROVIDED BY THE GEOTECHNICAL ENGINEERING UNIT

NOTE: APPROXIMATE QUANTITIES ONLY. UNCLASSIFIED EXCAVATION, BORROW EXCAVATION, FINE GRADING, CLEARING AND GRUBBING, REMOVAL OF EXISTING PAVEMENT, AND BREAKING OF EXISTING PAVEMENT WILL BE PAID FOR AT THE CONTRACT LUMP SUM PRICE FOR GRADING.

EST. SHALLOW UNDERCUT = 450 CUBIC YARDS CONTINGENCY
SELECT GRANULAR MATERIAL = 400 CUBIC YARDS CONTINGENCY
GEOTEXTILE FOR SOIL STABILIZATION = 400 SQUARE YARDS CONTINGENCY

PAVEMENT REMOVAL SUMMARY

SURVEY LINE	STATION	STATION	LOCATION LT/RT/CL	YD^2
-L-	10+00	12+41	CL	530.51
-L-	13+17	13+43	CL	53.80
-L-	13+83	14+11	CL	60.74
-L-	14+69	17+00	CL	537.65
			TOTAL:	1,182.71
			SAY:	1,190

PAVEMENT BREAKING SUMMARY

SURVEY LINE	STATION	STATION	LOCATION LT/RT/CL	YD^2
-L-	12+41	13+17	CL	164.18
-L-	14+11	14+69	CL	143.08
			TOTAL:	307.25
			SAY:	310

SHOULDER BERM GUTTER SUMMARY

SURVEY LINE	STATION	STATION	LENGTH
-L-	13+06	13+15	9
-L-	14+13	15+11	98
		TOTAL:	108
		SAY:	108

NOTE:
INVERT ELEVATIONS INDICATED ARE FOR BID PURPOSES ONLY AND SHALL NOT BE USED FOR PROJECT CONSTRUCTION STAKE OUT.
SEE "STANDARD SPECIFICATIONS FOR ROADS AND STRUCTURES, SECTION 300-5".

LIST OF PIPES, ENDWALLS, ETC.

STATION / SIZE / THICKNESS OR GAUGE	LOCATION (LT,RT, OR CL)	STRUCTURE NO. FROM	STRUCTURE NO. TO	TOP ELEVATION	INVERT ELEVATION	INVERT ELEVATION	SLOPE CRITICAL
-L- 13+11	14RT	0401		1126.03			
		0401	0402		1123.28	1113.48	
-L- 12+50	43RT	0403			1122.00	1118.00	
-L- 15+83	23LT	0404			1136.77	1130.77	
-L- 14+71	22LT	0405			1128.00	1126.00	
-L- 14+21	14RT	0406		1126.43			
		0406	0407		1123.68	1109.35	
TOTAL							

STRUCTURE NO. FROM	TO	DRAINAGE PIPE (RCP, PPP, CSP, CAAP, HDPE, or PVC) 12"	15"	18"	24"	36"	42"	48"	DO NOT USE RCP	DO NOT USE PPP	DO NOT USE CSP	DO NOT USE CAAP	DO NOT USE HDPE	C.S. PIPE 12" .064	15" .064	18" .064	24" .064	36" .079	42" .109	48" .109
0401																				
0401	0402														28					
0403				36																
0404																				
0405				48																
0406																				
0406	0407														40					
TOTAL				84											68					

STRUCTURE NO. FROM	TO	R.C. PIPE (CLASS III) 15"	18"	24"	30"	36"	42"	48"	R.C. PIPE (CLASS V) 12"	15"	18"	24"	30"	36"	42"	48"
0401																
0401	0402															
0403																
0404											72					
0405																
0406																
0406	0407															
TOTAL											72					

STRUCTURE NO. FROM	TO	**" R. C. PIPE (CLASS V)	**" R. C. PIPE CULVERTS, CONTRACTOR DESIGN PIPE	**" R. C. PIPE CULVERTS, CONTRACTOR DESIGN PIPE		REINFORCED ENDWALLS (CY)	ENDWALLS STD. 838.01, STD. 838.11 OR STD. 838.80 (UNLESS NOTED OTHERWISE) CU. YDS. R.C.P.	C.S.P.	QUANTITIES FOR DRAINAGE STRUCTURES * TOTAL L.F. FOR PAY QUANTITY SHALL BE COL. 'A' + (1.3 X COL.'B') PER EACH (0' THRU 5.0')	LIN. *FT. A 5.0' THRU 10.0'	B 10.0' AND ABOVE	C.B. STD. 840.01 OR STD. 840.02
0401									1			
0401	0402											
0403												
0404												
0405												
0406									1			
0406	0407											
TOTAL									2			

STRUCTURE NO. FROM	TO	FRAME, GRATES AND HOOD STANDARD 840.03 TYPE OF GRATE E	F	G		CONCRETE TRANSITIONAL SECTION CATCH BASIN	DROP INLET	T.B.G.D.I. STD. 840.35	T.B.G.D.I. (W.S. FLAT) FRAME W/2 GRATES STD. 840.29	15" ELBOWS							PIPE REMOVAL LIN.FT.	REMARKS
0401								1	1									
0401	0402									2								
0403										2							26	
0404																	20	
0405																		
0406								1	1									
0406	0407									2								
TOTAL								2	2	6							46	

ABBREVIATIONS

C.B.	CATCH BASIN
N.D.I.	NARROW DROP INLET
D.I.	DROP INLET
G.D.I.	GRATED DROP INLET
G.D.I. (N.S.)	GRATED DROP INLET (NARROW SLOT)
J.B.	JUNCTION BOX
M.H.	MANHOLE
T.B.D.I.	TRAFFIC BEARING DROP INLET
T.B.G.D.I.	TRAFFIC BEARING GRATED DROP INLET
T.B.J.B.	TRAFFIC BEARING JUNCTION BOX

"N" = DISTANCE FROM EDGE OF LANE TO FACE OF GUARDRAIL.
TOTAL SHOULDER WIDTH = DISTANCE FROM EDGE OF TRAVEL LANE TO SHOULDER BREAK POINT.
FLARE LENGTH = DISTANCE FROM LAST SECTION OF PARALLEL GUARDRAIL TO END OF GUARDRAIL.
W = TOTAL WIDTH OF FLARE FROM BEGINNING OF TAPER TO END OF GUARDRAIL.
G = GATING IMPACT ATTENUATOR TYPE 350
NG = NON-GATING IMPACT ATTENUATOR TYPE 350

GUARDRAIL SUMMARY

SURVEY LINE	BEG. STA.	END STA.	LOCATION	LENGTH STRAIGHT	LENGTH SHOP CURVED	LENGTH DOUBLE FACED	WARRANT POINT APPROACH END	WARRANT POINT TRAILING END	"N" DIST. FROM E.O.L.	TOTAL SHOUL. WIDTH	FLARE LENGTH APPROACH END	FLARE LENGTH TRAILING END	W APPROACH END	W TRAILING END
-L-	12+56.43	13+16.65	LT	37.50	31.25			13+16.65	5.80 MIN	10.30 MIN				
-L-	12+52.79	13+26.54 (BR)	RT	50.00	25.00		13+26.54 (BR)		4.50 MIN	7.50 MIN				
-L-	14+07.68	14+57.23	LT		62.50		14+07.68		5.50 MIN	8.50 MIN				
-L-	14+00.40 (BR)	15+53.46	RT		131.25			14+00.40 (BR)	4.00 MIN	7.00 MIN		25.00		0.5
			SUBTOTALS	87.50	250.00									
			ANCHOR DEDUCTION	37.50	81.25									
			TOTAL	50.00	168.75									
			SAY	62.50	187.50									

SURVEY LINE	BEG. STA.	ANCHORS GREU TL-2	TYPE III	AT-1	TYPE III SHOP CURVE						IMPACT ATTENUATOR TYPE 350 EA	G	NG	SINGLE FACED CONCRETE BARRIER	REMOVE EXISTING GUARDRAIL	REMOVE AND STOCKPILE EXISTING GUARDRAIL	REMARKS
-L-	12+56.43		1	1													ATTACH TO EXTENDED BRIDGE RAIL
-L-	12+52.79		1	1													
-L-	14+07.68			1	1												ATTACH TO EXTENDED BRIDGE RAIL
-L-	14+00.40 (BR)	1			1												

ANCHOR DEDUCTION
GREU TYPE TL-2: 1 @ 25' = 25'
AT-1: 3 @ 6.25' = 18.75'
TYPE III: 4 @ 18.75' = 75'
GRAND TOTAL = 118.75'

ADDITIONAL GUARDRAIL POSTS = 5

08-APR-2025 09:31
R:\Roadway\Proj\Wilkes280_Rdy_sum.dgn
KrawczyS

COMPUTED BY: __ PFT	2/18/2025
CHECKED BY: ___ SY	

(9-17-24)

PROJECT NO.	SHEET NO.
BP11.R013	3G-1

STATE OF NORTH CAROLINA
DIVISION OF HIGHWAYS

SUMMARY OF SUBSURFACE DRAINAGE

LINE	Station	Station	Location LT/RT/CL	Drain Type* UD/BD/SD	LF
CONTINGENCY				SD	200
				TOTAL LF:	200

*UD = Underdrain
*BD = Blind Drain
*SD = Subsurface Drain

SUMMARY OF ROCK PLATING

LINE	Beginning Slope (H:V)	Approx. Station	Ending Slope (H:V)	Approx. Station	Location LT/RT	Rock Plating Detail No. 1/2/3/4	Riprap Class* 1/2/B	Rock Plating SY
-L-	1.5:1	12+56.3	1.5:1	13+17.8	LT	2	2	212
-L-	1.5:1	13+99.4	1.5:1	14+60.5	RT	2	2	173
							TOTAL SY:	385

*Use Class 1, 2 or B riprap if riprap class is not shown for rock plating location.

8/17/99

PROJECT REFERENCE NO.	SHEET NO.
BP11.R013	4
R/W SHEET NO.	
ROADWAY DESIGN ENGINEER	HYDRAULICS ENGINEER
4/16/2025	4/16/2025

DOCUMENT NOT CONSIDERED FINAL UNLESS ALL SIGNATURES COMPLETED

RS&H
1520 SOUTH BOULEVARD, SUITE 200
CHARLOTTE, NC 28203
NC FIRM LICENSE No: F-0493

NOTE:
THE EXISTING DRAINAGE DITCHES ARE ALL STABLE AND HAVE NO SIGNS OF EROSION. ALL THREE EXISTING DRIVEWAY PIPES ARE IN POOR CONDITION. THERE ARE NO SIGNS OF SCOUR UNDER THE EXISTING BRIDGE, AND THE UPSTREAM CMP IS IN GOOD CONDITION.

-L- CURVE DATA

PI Sta 12+04.87	PI Sta 14+74.70	PI Sta 16+55.22
△ = 31° 11' 34.2" (RT)	△ = 76° 43' 17.5" (RT)	△ = 7° 20' 50.3" (LT)
D = 11° 27' 33.0"	D = 54° 34' 02.7"	D = 10° 54' 48.5"
L = 272.21'	L = 140.60'	L = 67.32'
T = 139.57'	T = 83.10'	T = 33.71'
R = 500.00'	R = 105.00'	R = 525.00'
SE = 03	SE = 04	SE = SEE PLANS
RO = SEE PLANS	RO = SEE PLANS	RO = SEE PLANS
DS = 25	DS = 20	DS = N/A

DETAIL A
CUT DITCH
(Not to Scale)

FROM -L- STA. 15+00 TO STA. 17+00 LT

DETAIL B
TOE PROTECTION
(Not to Scale)

Type of Liner= Class "B" Rip-Rap

FROM -L- STA. 12+00 TO STA. 12+31 RT
EST 23 TONS CLASS "B" RIP RAP
EST 41 SY GEOTEXTILE

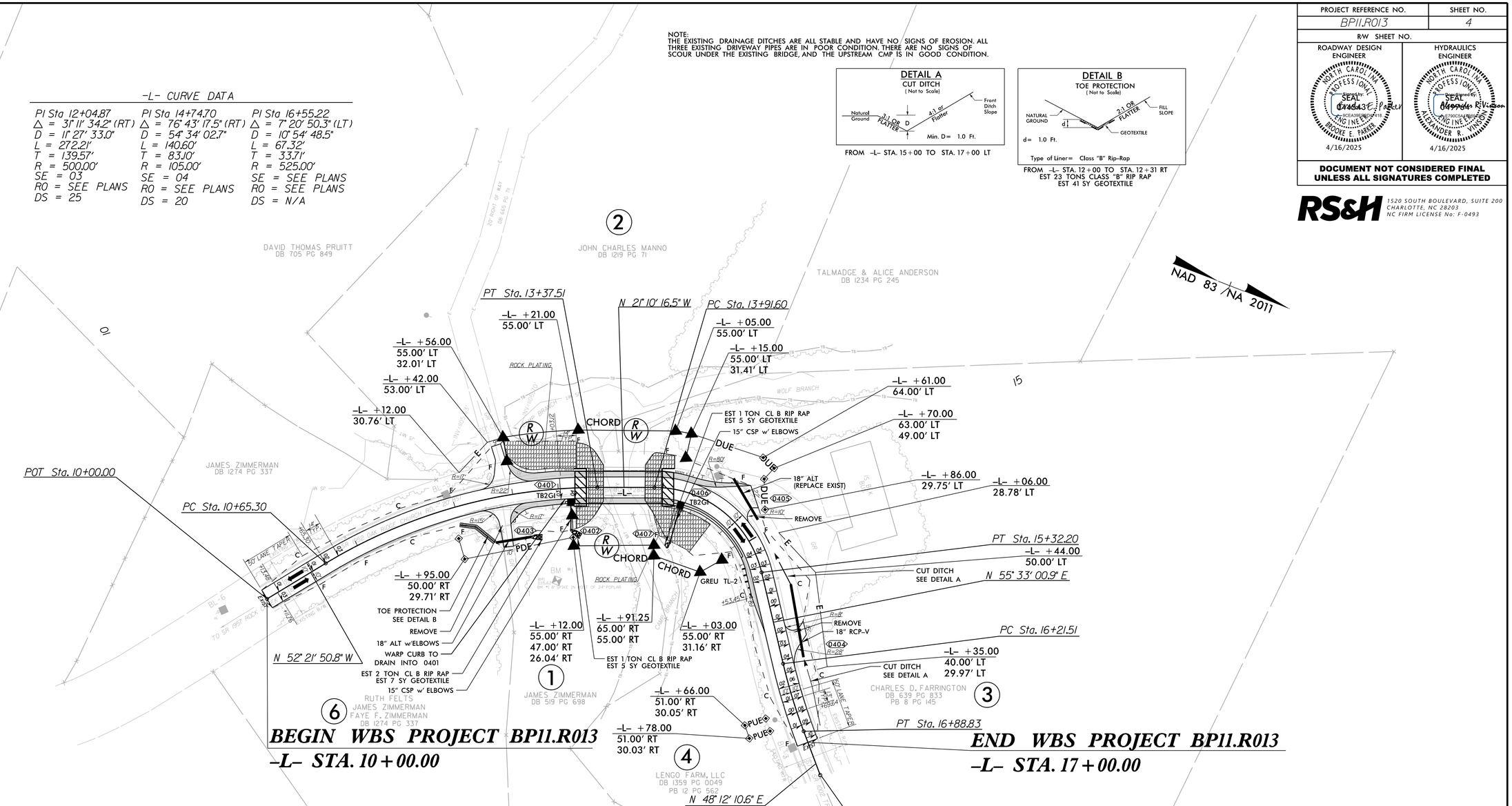

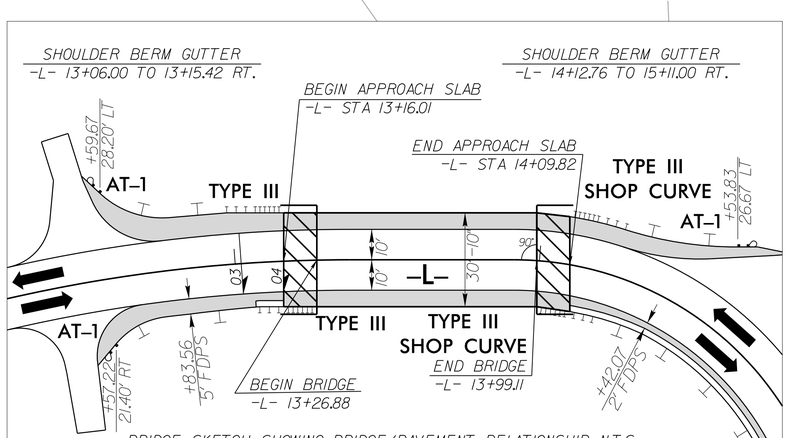

BRIDGE SKETCH SHOWING BRIDGE/PAVEMENT RELATIONSHIP N.T.S.

BRIDGE APPROACH SLAB

FOR -L- PROFILE SEE SHEET 5

FOR STRUCTURE PLANS SEE SHEETS S-1 THRU S-18

16-APR-2025 13:08
R:\Roadway\Proj\Wilkes280_Rdy_psh_4.dgn
$$$$USERNAME$$$$

5/28/99

PROJECT REFERENCE NO.	SHEET NO.
BP11.R013	5

ROADWAY DESIGN ENGINEER
NORTH CAROLINA PROFESSIONAL SEAL 044543 ENGINEER BROOKE F. PARKER
Docusigned by: Brooke F. Parker
4/11/2025

HYDRAULICS ENGINEER
NORTH CAROLINA PROFESSIONAL SEAL 049704 ENGINEER ALEXANDER R. VINSON
Docusigned by: Alexander R. Vinson
4/11/2025

DOCUMENT NOT CONSIDERED FINAL UNLESS ALL SIGNATURES COMPLETED

RS&H 1520 SOUTH BOULEVARD, SUITE 200 CHARLOTTE, NC 28203 NC FIRM LICENSE No: F-0493

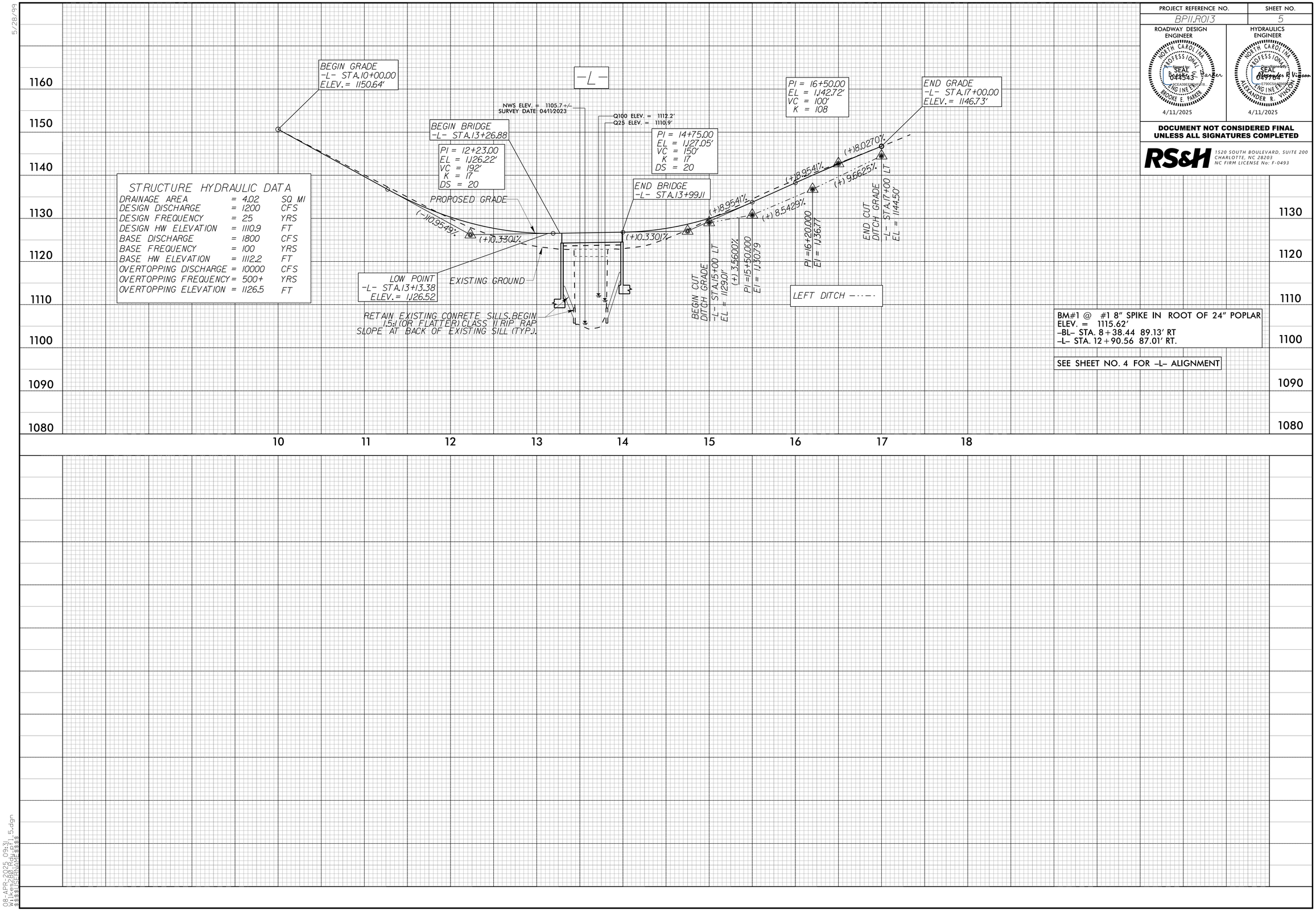

STRUCTURE HYDRAULIC DATA

DRAINAGE AREA	= 4.02	SQ MI
DESIGN DISCHARGE	= 1200	CFS
DESIGN FREQUENCY	= 25	YRS
DESIGN HW ELEVATION	= 1110.9	FT
BASE DISCHARGE	= 1800	CFS
BASE FREQUENCY	= 100	YRS
BASE HW ELEVATION	= 1112.2	FT
OVERTOPPING DISCHARGE	= 10000	CFS
OVERTOPPING FREQUENCY	= 500+	YRS
OVERTOPPING ELEVATION	= 1126.5	FT

BM#1 @ #1 8" SPIKE IN ROOT OF 24" POPLAR
ELEV. = 1115.62'
-BL- STA. 8+38.44 89.13' RT
-L- STA. 12+90.56 87.01' RT.

SEE SHEET NO. 4 FOR -L- ALIGNMENT

08-APR-2025 09:31
WILKES COUNTY
$$$$USERNAME$$$$
BP11_R013_5.dgn

STATE	STATE PROJECT REFERENCE NO.	SHEET NO.	TOTAL SHEETS
N.C.	BP11-R013	RW01	04

STATE OF NORTH CAROLINA
DIVISION OF HIGHWAYS

SURVEY CONTROL, EXISTING CENTERLINES, RIGHT OF WAY, EASEMENTS AND PROPERTY TIES

WILKES COUNTY

NAD 83/ NA 2011

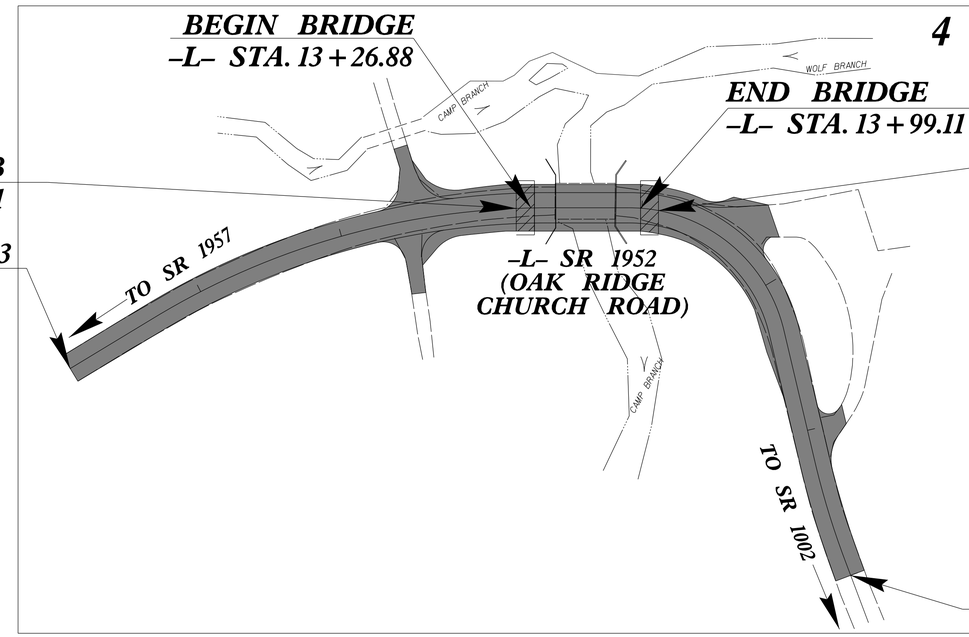

BEGIN BRIDGE
–L– STA. 13+26.88

END BRIDGE
–L– STA. 13+99.11

BEGIN APPROACH SLAB
–L– STA. 13+16.01

END APPROACH SLAB
–L– STA. 14+09.82

BEGIN PROJECT WBS BP11.R013
–L– STA. 10+00.00

END PROJECT WBS BP11.R013
–L– STA. 17+00.00

TIP PROJECT: BP11-R013

09/08/99

13-MAR-2025 16:24
L:\OLD_D\NWILKES\Bridge Jobs 2022\960280\RIGHT OF WAY SHEETS\ROADWAY 25030\150_001_BP11R013_ls_rw01(2).dgn
csmastin AT LS-32954/L

GRAPHIC SCALE

50 25 0 50 100
PLANS

DATUM DESCRIPTION

THE LOCALIZED COORDINATE SYSTEM DEVELOPED FOR THIS PROJECT IS BASED ON THE STATE PLANE COORDINATES ESTABLISHED BY NCDOT FOR MONUMENT "960280-2"
WITH NAD 83/NSRS 2011 STATE PLANE GRID COORDINATES OF NORTHING: 922,985.9031(ft) EASTING: 1,382,907.7926(ft)
ELEVATION: 1186.38(ft)
THE AVERAGE COMBINED GRID FACTOR USED ON THIS PROJECT (GROUND TO GRID) IS: 0.9999783089
THE N.C. LAMBERT GRID BEARING AND LOCALIZED HORIZONTAL GROUND DISTANCE FROM "960280-2" TO -L- STATION 10+00.00 IS S 14-32'45.9" W 944.94(ft)
ALL LINEAR DIMENSIONS ARE LOCALIZED HORIZONTAL DISTANCES
VERTICAL DATUM USED IS NAVD 88

Prepared In the Office of:
NORTH WILKESBORO LOCATION & SURVEYS UNIT

2024 STANDARD SPECIFICATIONS

RIGHT OF WAY DATE:	*LETTING DATE:*
05/23/2024	*05/09/2025*

PROFESSIONAL LAND SURVEYOR

NORTH CAROLINA PROFESSIONAL SEAL L-4301 LAND SURVEYOR R. LANDON WAGONER

Signed by: R. Landon Wagoner
9406813 7FD3042D...
03/13/2025
SIGNATURE: ***Date:***

STATE OF NORTH CAROLINA DEPARTMENT OF TRANSPORTATION

6/2/99

PROPOSED ALIGNMENT CONTROL SHEET

PROJECT REFERENCE NO.	SHEET NO.
BP11-R013	RW02D-1

Location and Surveys

Stantec
ONE WEST FOURTH ST., SUITE 820
WINSTON SALEM, N.C. 27101
LICENSE NO.: F-0672
www.stantec.com
Proj.# 234300157

PROJECT SURVEYOR

NORTH CAROLINA PROFESSIONAL SEAL L-3834 LAND SURVEYOR CLINTON B. OSBORNE

DOCUMENT NOT CONSIDERED FINAL UNLESS ALL SIGNATURES COMPLETED

I, Clinton B. Osborne, PLS, certify that the data compiled came from available surveys/mapping performed by others and provided to me by NCDOT and do not certify to the accuracy or quality of the individual data sources.

This 26th day of June, 2024.

DocuSigned by:
Clinton B. Osborne
0A5F6B085F64498...

Professional Land Surveyor L-3834

L

TYPE	STATION	NORTH	EAST
POT	10+00.00	922071.2541	1382670.4632
PC	10+65.30	922111.1320	1382618.7477
PT	13+37.51	922326.5071	1382457.8160
PC	13+91.60	922376.9419	1382438.2827
PT	15+32.20	922501.4488	1382476.7990
PC	16+21.51	922551.9692	1382550.4450
PT	16+88.83	922593.5032	1382603.3708
POT	17+33.37	922623.1908	1382636.5779

NOTES:

1. PROJECT CONTROL WAS ESTABLISHED USING GNSS, THE GLOBAL NAVIGATION SATELLITE SYSTEM.

2. THE PROPOSED ALIGNMENT CONTROL DATA FOR THIS PROJECT HAS BEEN COMPILED FROM VARIOUS SOURCES. IF FURTHER INFORMATION REGARDING PROJECT CONTROL IS NEEDED, PLEASE CONTACT THE LOCATION AND SURVEYS UNIT.

27-JUN-2024 08:11
U:\234300157\survey\drawing\dgn\BP11-R013\BP11-R013_ls_rw02d-1.dgn
osborne AT OSBORNEC-L

6/2/99

RIGHT OF WAY CONTROL SHEET

PROJECT REFERENCE NO.	SHEET NO.
BP11-R013	RW03E-1

Location and Surveys

Stantec
ONE WEST FOURTH ST., SUITE 820
WINSTON SALEM, N.C. 27101
LICENSE NO.: F-0672
www.stantec.com
Proj.#: 234300157

PROJECT SURVEYOR

NORTH CAROLINA PROFESSIONAL SEAL L-3834 LAND SURVEYOR CLINTON B. OSBORNE

DOCUMENT NOT CONSIDERED FINAL UNLESS ALL SIGNATURES COMPLETED

I , Clinton B. Osborne , certify that the right of way and permanent easement monumentation for this project shown herein was completed under my direct and responsible charge from an actual survey made under my supervision; that all horizontal closures had a minimum ratio of precision of 1:10,000 (Class A). Field work was performed from 06/17/2024 to 06/19/2024, and all coordinates are based on NAD83/2011; That this survey was performed to meet the requirements of 21NCAC 56.1600 as applicable.

This 26th day of June, 2024.

DocuSigned by:
Clinton B. Osborne
0A6F6B085F644498...

Professional Land Surveyor L-3834

ROW MARKER IRON PIN AND CAP-E

ALIGN	STATION	OFFSET	NORTH	EAST
L	12+56.00	-55.00	922225.3012	1382445.9236
L	12+56.00	-32.01	922236.9719	1382465.7270
L	13+12.00	55.00	922325.4145	1382517.8412
L	13+12.00	26.04	922313.5901	1382491.4011
L	13+21.00	-55.00	922289.6628	1382413.4293
L	13+91.25	55.00	922396.4770	1382489.6991
L	13+91.25	65.00	922400.0916	1382499.0216
L	14+05.00	-55.00	922376.5388	1382380.8534
L	14+15.00	-55.00	922391.4847	1382377.9129
L	14+15.00	-31.41	922394.9309	1382401.2453
L	15+03.00	55.00	922446.7463	1382497.6797
L	15+03.00	31.16	922461.9455	1382479.3183

ROW MARKER PERMANENT EASEMENT-E

ALIGN	STATION	OFFSET	NORTH	EAST
* L	11+95.00	50.00	922233.1296	1382567.0697
L	11+95.00	29.71	922220.7785	1382550.9746
L	13+12.00	47.00	922322.1485	1382510.5382
L	14+61.00	-64.00	922463.4246	1382374.3229
L	14+70.00	-63.00	922476.7359	1382380.0042
L	14+70.00	-49.00	922471.5798	1382393.0201
L	14+86.00	-29.75	922482.9329	1382419.8994
L	16+66.00	30.05	922555.4102	1382605.0597
L	16+66.00	51.00	922539.1988	1382618.3311
L	16+78.00	51.00	922547.6544	1382628.4222
L	16+78.00	30.03	922563.5739	1382614.7703

MARKER EXCEPTIONS:
* = SET MAG NAIL

NOTES:

1. IF FURTHER INFORMATION REGARDING PROJECT CONTROL IS NEEDED PLEASE CONTACT THE LOCATION AND SURVEYS UNIT.
2. PROJECT CONTROL WAS ESTABLISHED USING GNSS, THE GLOBAL NAVIGATION SATELLITE SYSTEM.
3. RIGHT OF WAY MONUMENTATION ESTABLISHED 06/17/2024 TO 06/19/2024 .

27-JUN-2024 09:32
U:\234300157\survey\drawing\dgn\BP11-R013\BP11-R013_ls_rw03e-1.dgn
osborne AT OSBORNEC-L

PROJECT REFERENCE NO.	SHEET NO.
BP11-R013	RW04

Location and Surveys

NORTH WILKESBORO
LOCATION & SURVEYS UNIT

PROJECT SURVEYOR

SEAL L-4301 R. LANDON WAGONER

DOCUMENT NOT CONSIDERED FINAL
UNLESS ALL SIGNATURES COMPLETED

I , R. Landon Wagoner, certify that the right of way and permanent easement monumentation for this project shown herein was completed under my direct and responsible charge from an actual survey made under my supervision; that all horizontal closures had a minimum ratio of precision of 1:10,000 (Class A). Field work was performed from 06/17/2024 to 06/19/2024, and all coordinates are based on NAD83/2011; That this survey was performed to meet the requirements of 21NCAC 56.1600 as applicable.

This 13th day of March, 2025.

Signed by:
R. Landon Wagoner
94066137FD3042D...
Professional Land Surveyor L-4301

-L- CURVE DATA

PI Sta 12+04.87	PI Sta 14+74.70	PI Sta 16+55.22
△ = 31° 11′ 34.2″ (RT)	△ = 76° 43′ 17.5″ (RT)	△ = 7° 20′ 50.3″ (LT)
D = 11° 27′ 33.0″	D = 54° 34′ 02.7″	D = 10° 54′ 48.5″
L = 272.21′	L = 140.60′	L = 67.32′
T = 139.57′	T = 83.10′	T = 33.71′
R = 500.00′	R = 105.00′	R = 525.00′
SE = 03	SE = 04	SE = SEE PLANS
RO = SEE PLANS	RO = SEE PLANS	RO = SEE PLANS
	*DS = 20	

*NOTE: DESIGN EXCEPTION REQUIRED FOR DESIGN SPEED

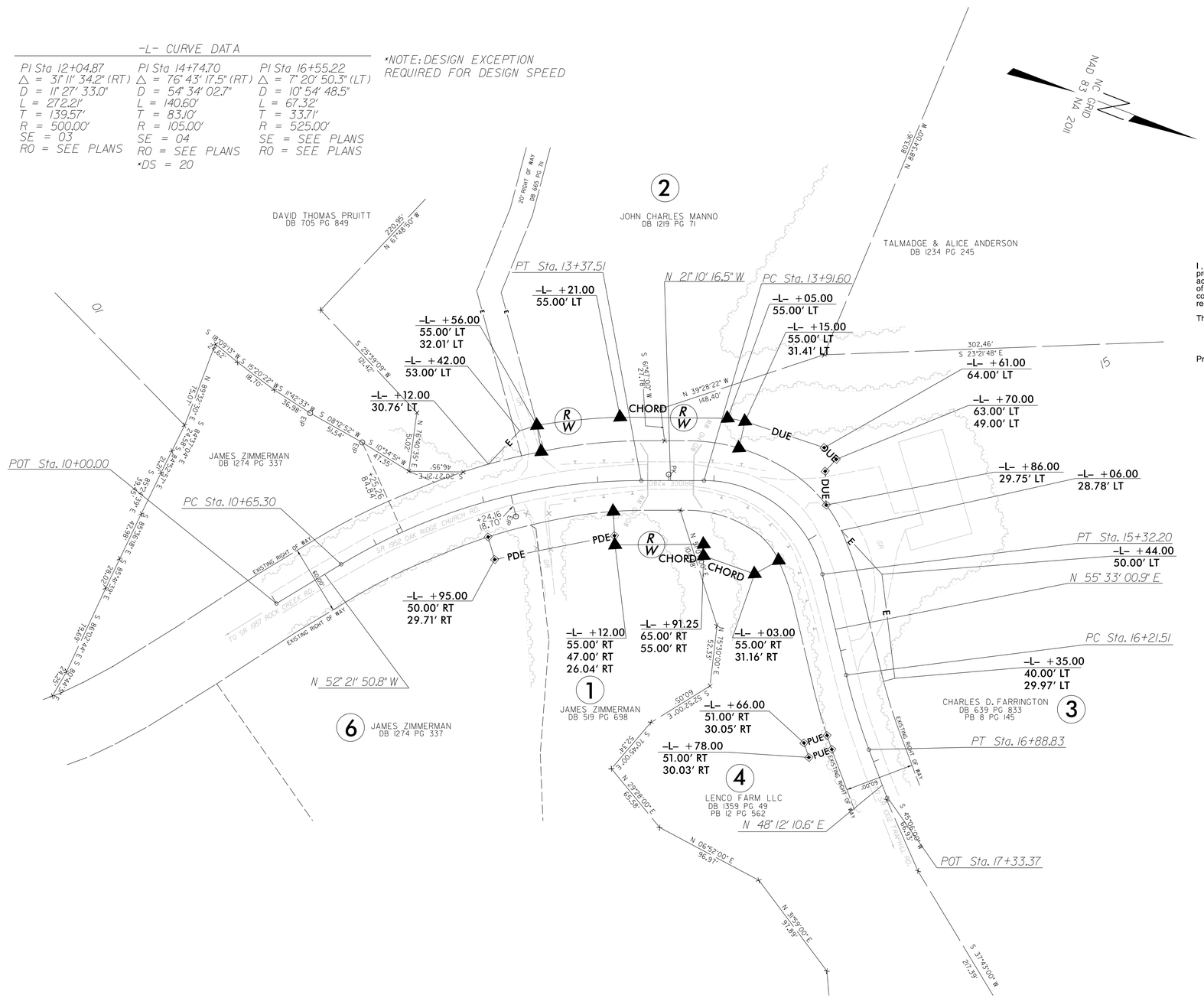

NOTES:

1. IF FURTHER INFORMATION REGARDING PROJECT CONTROL IS NEEDED PLEASE CONTACT THE LOCATION AND SURVEYS UNIT.
2. PROJECT CONTROL WAS ESTABLISHED USING GNSS, THE GLOBAL NAVIGATION SATELLITE SYSTEM.
3. RIGHT OF WAY MONUMENTATION ESTABLISHED 06/17/2024 TO 06/19/2024.

REVISIONS

6/2/99

13-MAR-2025 16:16
L:\OLD_D\NWILKES\Bridge jobs 2022\960280\RIGHT OF WAY SHEETS\ROADWAY 250310\old150_009_BP11R013_ls_rw04.dgn
csmastin AT LS-329547L

STATE OF NORTH CAROLINA
DIVISION OF HIGHWAYS

TRANSPORTATION MANAGEMENT PLAN

WILKES COUNTY

LOCATION: REPLACEMENT OF BRIDGE 960280 OVER CAMP BRANCH ON SR 1952 (OAK RIDGE CHURCH ROAD)

TYPE OF WORK: GRADING, PAVING, DRAINAGE & STRUCTURE (BRIDGE)

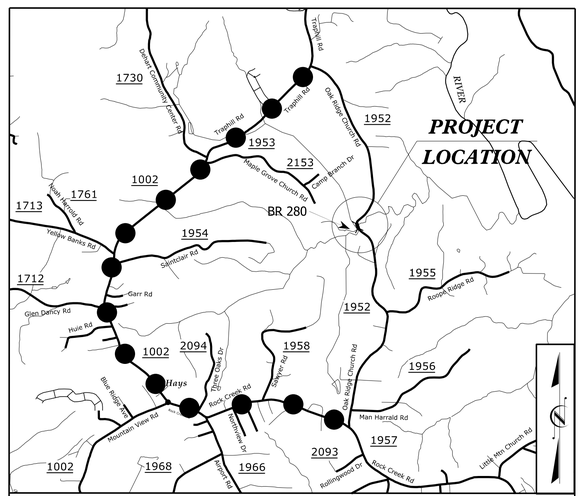

DETOUR

VICINITY MAP N.T.S

INDEX OF SHEETS

SHEET NO.
TMP-1

PROJECT WBS: BP11.R013

DOCUMENT NOT CONSIDERED FINAL UNLESS ALL SIGNATURES COMPLETED

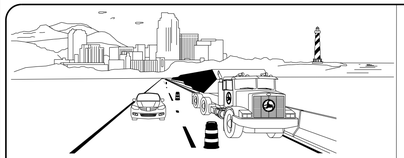

WORK ZONE SAFETY & MOBILITY
"from the MOUNTAINS to the COAST"

PLANS PREPARED BY:

BROOKE E. PARKER, PE
PROJECT ENGINEER

REBECCA E. WRIGHT, PE
PROJECT DESIGN ENGINEER

NCDOT CONTACTS:

ROB N. WEISZ, PE
NCDOT DIVISION 11 BRIDGE PROGRAM MANAGER

RS&H
NC FIRM LICENSE No: F-0493
1520 SOUTH BOULEVARD, SUITE 200
CHARLOTTE, NC 28203

APPROVED: Signed by: Rebecca E Wright 4FA8CA3CEBA04F3...

DATE: 4/11/2025

NORTH CAROLINA PROFESSIONAL SEAL 057350 ENGINEER REBECCA E. WRIGHT

4/11/2025
R:\Traffic\TrafficControl\Wilkes280_tmp_tsh.dgn
User:McLaughR

PROJ. REFERENCE NO.	SHEET NO.
BP11.R013	TMP-1A

ROADWAY STANDARD DRAWINGS

THE FOLLOWING ROADWAY STANDARDS AS SHOWN IN "ROADWAY STANDARD DRAWINGS" - N.C. DEPARTMENT OF TRANSPORTATION - RALEIGH, N.C., DATED JANUARY 2024 ARE APPLICABLE TO THIS PROJECT AND BY REFERENCE HEREBY ARE CONSIDERED A PART OF THESE PLANS:

STD. NO.	TITLE
1101.01	WORK ZONE WARNING SIGNS
1101.03	TEMPORARY ROAD CLOSURES
1101.11	TRAFFIC CONTROL DESIGN TABLES
1110.01	STATIONARY WORK ZONE SIGNS
1145.01	BARRICADES

LEGEND

GENERAL

- DIRECTION OF TRAFFIC FLOW
- DIRECTION OF PEDESTRIAN TRAFFIC FLOW
- EXIST. PVMT.
- NORTH ARROW
- PROPOSED PVMT.
- TEMP. SHORING (LOCATION PURPOSES ONLY)
- WORK AREA
- REMOVAL

SIGNALS

- EXISTING
- PROPOSED
- TEMPORARY

PAVEMENT MARKINGS

- EXISTING LINES
- TEMPORARY LINES

TRAFFIC CONTROL DEVICES

- BARRICADE (TYPE III)
- CONE
- DRUM
- SKINNY DRUM
- TUBULAR MARKER
- TEMPORARY CRASH CUSHION
- FLASHING ARROW BOARD
- FLAGGER
- LAW ENFORCEMENT
- TRUCK MOUNTED ATTENUATOR (TMA)
- CHANGEABLE MESSAGE SIGN

TEMPORARY SIGNING

- PORTABLE SIGN
- STATIONARY SIGN
- STATIONARY OR PORTABLE SIGN

PAVEMENT MARKERS

- CRYSTAL/CRYSTAL
- CRYSTAL/RED
- YELLOW/YELLOW

PAVEMENT MARKING SYMBOLS

- PAVEMENT MARKING SYMBOLS

RS&H
1520 SOUTH BOULEVARD, SUITE 200
CHARLOTTE, NC 28203
NC FIRM LICENSE No: F-0493

APPROVED: Signed by: Rebecca E Wright 4FA8CA3CEBA04F3...

DATE: 4/11/2025

NORTH CAROLINA PROFESSIONAL SEAL 057350 ENGINEER REBECCA E. WRIGHT

DOCUMENT NOT CONSIDERED FINAL UNLESS ALL SIGNATURES COMPLETED

DIVISION OF HIGHWAYS · STATE OF NORTH CAROLINA · DEPARTMENT OF TRANSPORTATION · WORK ZONE TRAFFIC CONTROL

ROADWAY STANDARD DRAWINGS & LEGEND

PROJ. REFERENCE NO.	SHEET NO.
BP11.R013	TMP-1B

MANAGEMENT STRATEGY

THE FOLLOWING LISTED WORK ZONE STRATEGIES ARE RECOMMENDED FOR INCLUSION WITHIN THIS TRANSPORTATION MANAGEMENT PLAN (TMP).

RECOMMENDED STRATEGIES:

TRAFFIC MANAGEMENT STRATEGIES:
- FULL ROADWAY CLOSURES
- OFF-SITE DETOURS / USE OF ALTERNATIVE ROUTES

PHASING NOTES

STEP 1 - USING THE ROADWAY STANDARD DRAWINGS INCLUDED ON SHEET TMP-1A IN CONJUNCTION WITH THE SIGNS INCLUDED ON SHEETS TMP-3, CLOSE SR 1952 (OAK RIDGE CHURCH RD.) AND PLACE TRAFFIC ON OFF-SITE DETOUR.

STEP 2 - REMOVE EXISTING STRUCTURE NO. 960280 AND CONSTRUCT PROPOSED ROADWAY, BRIDGE AND APPROACHES, UP TO AND INCLUDING THE FINAL LAYER OF SURFACE COURSE. PLACE FINAL PAVEMENT MARKING/MARKERS AND TIE-IN WITH EXISTING MARKERS.

STEP 3 - REMOVE ALL TRAFFIC CONTROL DEVICES AND REOPEN ROAD TO FINAL TRAFFIC PATTERN.

GENERAL NOTES

CHANGES MAY BE REQUIRED WHEN PHYSICAL DIMENSIONS IN THE DETAIL DRAWINGS, STANDARD DETAILS, AND ROADWAY DETAILS ARE NOT ATTAINABLE TO MEET FIELD CONDITIONS OR RESULT IN DUPLICATE OR UNDESIRED OVERLAPPING OF DEVICES. MODIFICATION MAY INCLUDE: MOVING, SUPPLEMENTING, COVERING, OR REMOVAL OF DEVICES AS DIRECTED BY THE ENGINEER.

THE FOLLOWING GENERAL NOTES APPLY AT ALL TIMES FOR THE DURATION OF THE CONSTRUCTION PROJECT EXCEPT WHEN OTHERWISE NOTED IN THE PLAN OR DIRECTED BY THE ENGINEER.

TRAFFIC PATTERN ALTERATIONS

A) NOTIFY THE ENGINEER THIRTY (30) CALENDAR DAYS PRIOR TO ANY TRAFFIC PATTERN ALTERATION.

SIGNING

B) INSTALL ADVANCE WORK ZONE WARNING SIGNS WHEN WORK IS WITHIN 40 FT FROM THE EDGE OF TRAVEL LANE AND NO MORE THAN THREE (3) DAYS PRIOR TO THE BEGINNING OF CONSTRUCTION

C) PROVIDE SIGNING AND DEVICES REQUIRED TO CLOSE THE ROAD ACCORDING TO THE ROADWAY STANDARD DRAWINGS AND TRAFFIC CONTROL PLANS.

PROVIDE SIGNING REQUIRED FOR THE OFF-SITE DETOUR ROUTE AS SHOWN IN THE TRAFFIC CONTROL PLANS.

D) COVER OR REMOVE ALL SIGNS AND DEVICES REQUIRED TO CLOSE THE ROAD WHEN ROAD CLOSURE IS NOT IN OPERATION.

COVER OR REMOVE ALL SIGNS REQUIRED FOR THE OFF-SITE DETOUR WHEN THE DETOUR IS NOT IN OPERATION.

E) ENSURE ALL NECESSARY SIGNING IS IN PLACE PRIOR TO ALTERING ANY TRAFFIC PATTERN.

TRAFFIC CONTROL DEVICES

F) PLACE TYPE III BARRICADES, WITH "ROAD CLOSED" SIGN R11-2 ATTACHED, OF SUFFICIENT LENGTH TO CLOSE ENTIRE ROADWAY.

RS&H
1520 SOUTH BOULEVARD, SUITE 200
CHARLOTTE, NC 28203
NC FIRM LICENSE No: F-0493

APPROVED: Signed by: Rebecca E. Wright 4FA6CA3CEBA04F3...

DATE: 4/11/2025

NORTH CAROLINA PROFESSIONAL SEAL 057350 ENGINEER REBECCA E. WRIGHT

DOCUMENT NOT CONSIDERED FINAL UNLESS ALL SIGNATURES COMPLETED

DIVISION OF HIGHWAYS · STATE OF NORTH CAROLINA · DEPARTMENT OF TRANSPORTATION · WORK ZONE TRAFFIC CONTROL

MANAGEMENT STRATEGY, PHASING NOTES, AND GENERAL NOTES

PROJ. REFERENCE NO.	SHEET NO.
BP11.R013	TMP-2

SIGN NUMBER: DETOUR
TYPE: D
QUANTITY: 14

SIGN WIDTH: 3'-0"
HEIGHT: 2'-0"
TOTAL AREA: 6.0 Sq.Ft.

BORDER TYPE: FLUSH
RECESS: 0.47"
WIDTH: 0.63"
RADII: 1.5"

NO. Z BARS:
LENGTH:

BACKG COLOR: Orange
COPY COLOR: Black

SYMBOL	X	Y	WID	HT

MAT'L: 0.125" (3.2 mm) ALUMINUM

DESIGN BY: REM
PROJECT ID: BP11.R013
CHECKED BY: BEP
LOCATION: WILKES
Jul 13, 2023
DIV: 11

USE NOTES:

1. Legend and border(except those that are colored black) shall be direct applied Grade C sheeting.
2. Background shall be Grade C reflective sheeting.

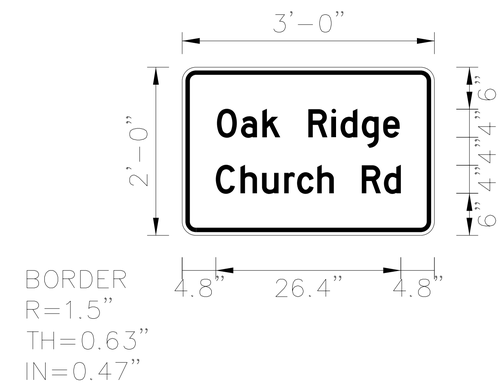

Spacing Factor is 1 unless specified otherwise

LETTER POSITIONS

Letter locations are panel edge to lower left corner

										Series/Size Text Length
	O	a	k		R	i	d	g	e	D 2000
	5	8.4	11.4	14	18	21.3	22.6	25.6	28.7	26.1
	C	h	u	r	c	h		R	d	D 2000
	4.8	8.3	11.4	14.6	16.4	19.3	21.6	25.6	28.8	26.4

FILENAME: Wilkes280_tmp_sign design

NORTH CAROLINA D.O.T. SIGN DETAIL

RS&H
1520 SOUTH BOULEVARD, SUITE 200
CHARLOTTE, NC 28203
NC FIRM LICENSE No: F-0493

APPROVED: Rebecca E Wright
DATE: 4/11/2025

NORTH CAROLINA PROFESSIONAL SEAL 057350 ENGINEER REBECCA E. WRIGHT

DOCUMENT NOT CONSIDERED FINAL UNLESS ALL SIGNATURES COMPLETED

DIVISION OF HIGHWAYS STATE OF NORTH CAROLINA DEPARTMENT OF TRANSPORTATION WORK ZONE TRAFFIC CONTROL

OAK RIDGE CHURCH RD
SIGN DESIGN

4/7/2025
R:\Traffic\TrafficControl\Wilkes280_tmp_detour sign.dgn
User:McLaughR

PROJ. REFERENCE NO.	SHEET NO.
BP11.R013	TMP-3

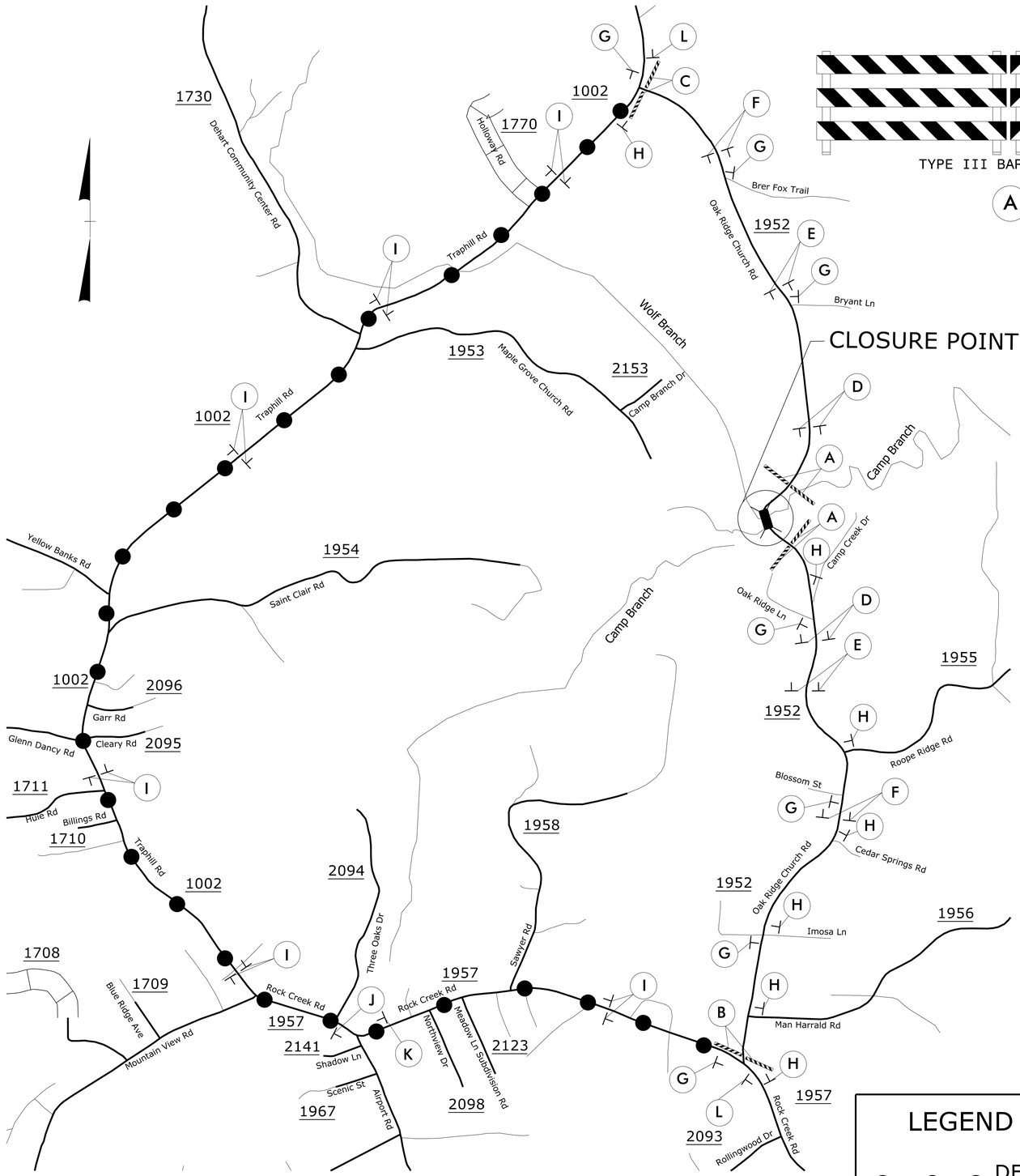

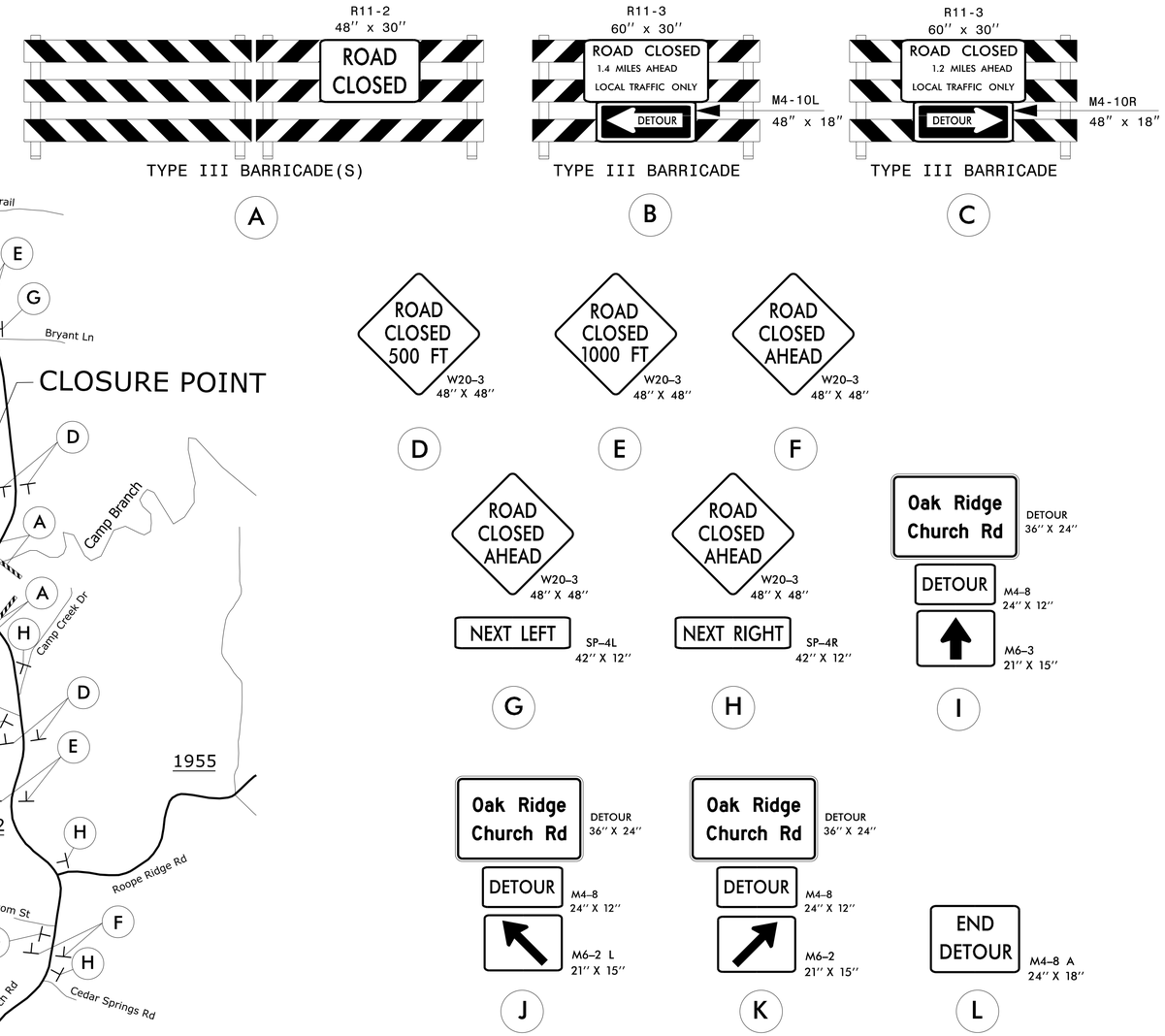

RS&H
1520 SOUTH BOULEVARD, SUITE 200
CHARLOTTE, NC 28203
NC FIRM LICENSE No: F-0493

LEGEND

DETOUR ROUTE

APPROVED: Signed by: Rebecca E Wright 4FA8CA3CEBA04F3...

DATE: 4/11/2025

NORTH CAROLINA PROFESSIONAL SEAL 057350 ENGINEER REBECCA E. WRIGHT

DOCUMENT NOT CONSIDERED FINAL UNLESS ALL SIGNATURES COMPLETED

DIVISION OF HIGHWAYS · STATE OF NORTH CAROLINA · DEPARTMENT OF TRANSPORTATION · WORK ZONE TRAFFIC CONTROL

OAK RIDGE CHURCH RD DETOUR

4/7/2025
R:\Traffic\TrafficControl\Wilkes280_tmp_detour.dgn
User:McLaughR

PROJECT WBS: BP11.R013

CONTRACT: DK00427

TIP NO.	SHEET NO.
BP11.R013	PMP-1

APPROVED: Signed by: Rebecca E. Wright 4FA6CA3CEBA04F3...

DATE: 4/11/2025

SEAL

NORTH CAROLINA PROFESSIONAL SEAL 057350 ENGINEER REBECCA E. WRIGHT

DOCUMENT NOT CONSIDERED FINAL UNLESS ALL SIGNATURES COMPLETED

STATE OF NORTH CAROLINA
DEPARTMENT OF TRANSPORTATION

PAVEMENT MARKING PLAN
WILKES COUNTY

LOCATION: REPLACEMENT OF BRIDGE 960280 OVER CAMP BRANCH ON SR 1952 (OAK RIDGE CHURCH ROAD)

TYPE OF WORK: GRADING, PAVING, DRAINAGE & STRUCTURE (BRIDGE)

INDEX

ROADWAY STANDARD DRAWING

THE FOLLOWING ROADWAY STANDARDS AS APPEAR IN "ROADWAY STANDARD DRAWINGS" - PROJECT SERVICES UNIT - N.C. DEPARTMENT OF TRANSPORTATION - RALEIGH, N.C., DATED JANUARY 2024 ARE APPLICABLE TO THIS PROJECT AND BY REFERENCE HEREBY ARE CONSIDERED A PART OF THESE PLANS:

STD. NO.	TITLE
1205.01	PAVEMENT MARKINGS - LINE TYPES AND OFFSETS
1205.02	PAVEMENT MARKINGS - TWO-LANE AND MULTILANE ROADWAYS
1205.12	PAVEMENT MARKINGS - BRIDGES
1261.01	GUARDRAIL AND BARRIER DELINEATORS - INSTALLATION SPACING
1261.02	GUARDRAIL AND BARRIER DELINEATORS - TYPES AND MOUNTING
1262.01	GUARDRAIL END DELINEATION

GENERAL NOTES

THE FOLLOWING GENERAL NOTES APPLY AT ALL TIMES FOR THE DURATION OF THE CONSTRUCTION PROJECT, EXCEPT WHEN OTHERWISE NOTED IN THE PLAN, OR DIRECTED BY THE ENGINEER.

A) INSTALL PAVEMENT MARKINGS AND PAVEMENT MARKERS ON THE FINAL SURFACE AS FOLLOWS:

ROAD NAME	MARKING	MARKER
OAK RIDGE CHURCH RD	PAINT	N/A

B) TIE PROPOSED PAVEMENT MARKING LINES TO EXISTING PAVEMENT MARKING LINES.

C) REMOVE/REPLACE ANY CONFLICTING/DAMAGED PAVEMENT MARKINGS AND MARKERS.

D) PLACE TWO APPLICATIONS OF PAINT PAVEMENT MARKINGS ON THE FINAL WEARING SURFACE. PLACE THE SECOND APPLICATION OF PAINT UPON SUFFICIENT DRYING TIME OF THE FIRST.

E) PASSING ZONES WILL BE DETERMINED IN THE FIELD AND MUST BE APPROVED BY THE ENGINEER.

PAVEMENT MARKING SCHEDULE

P1	WHITE EDGELINE	PAINT (4")
P13	YELLOW DOUBLE CENTER	PAINT (4")

PLAN SUBMITTED TO: NCDOT DIVISION 11

ROB WEISZ, PE — NCDOT CONTACT

STATE OF NORTH CAROLINA · DEPARTMENT OF TRANSPORTATION

PLAN PREPARED BY: RS&H

BROOKE PARKER, PE — PROJECT ENGINEER

REBECCA WRIGHT, PE — PROJECT DESIGNER

RS&H — 1520 SOUTH BOULEVARD, SUITE 200, CHARLOTTE, NC 28203, NC FIRM LICENSE No: F-0493

4/11/2025
R:\Traffic\Delineation\Wilkes280_PMP_tsh.dgn
User:McLaughR

TIP NO.	SHEET NO.
BP11.R013	PMP-2

APPROVED: Signed by: Rebecca E. Wright 4FA6CA3CEBA04F3...

DATE: 4/11/2025

SEAL

NORTH CAROLINA PROFESSIONAL SEAL 057350 ENGINEER REBECCA E. WRIGHT

DOCUMENT NOT CONSIDERED FINAL UNLESS ALL SIGNATURES COMPLETED

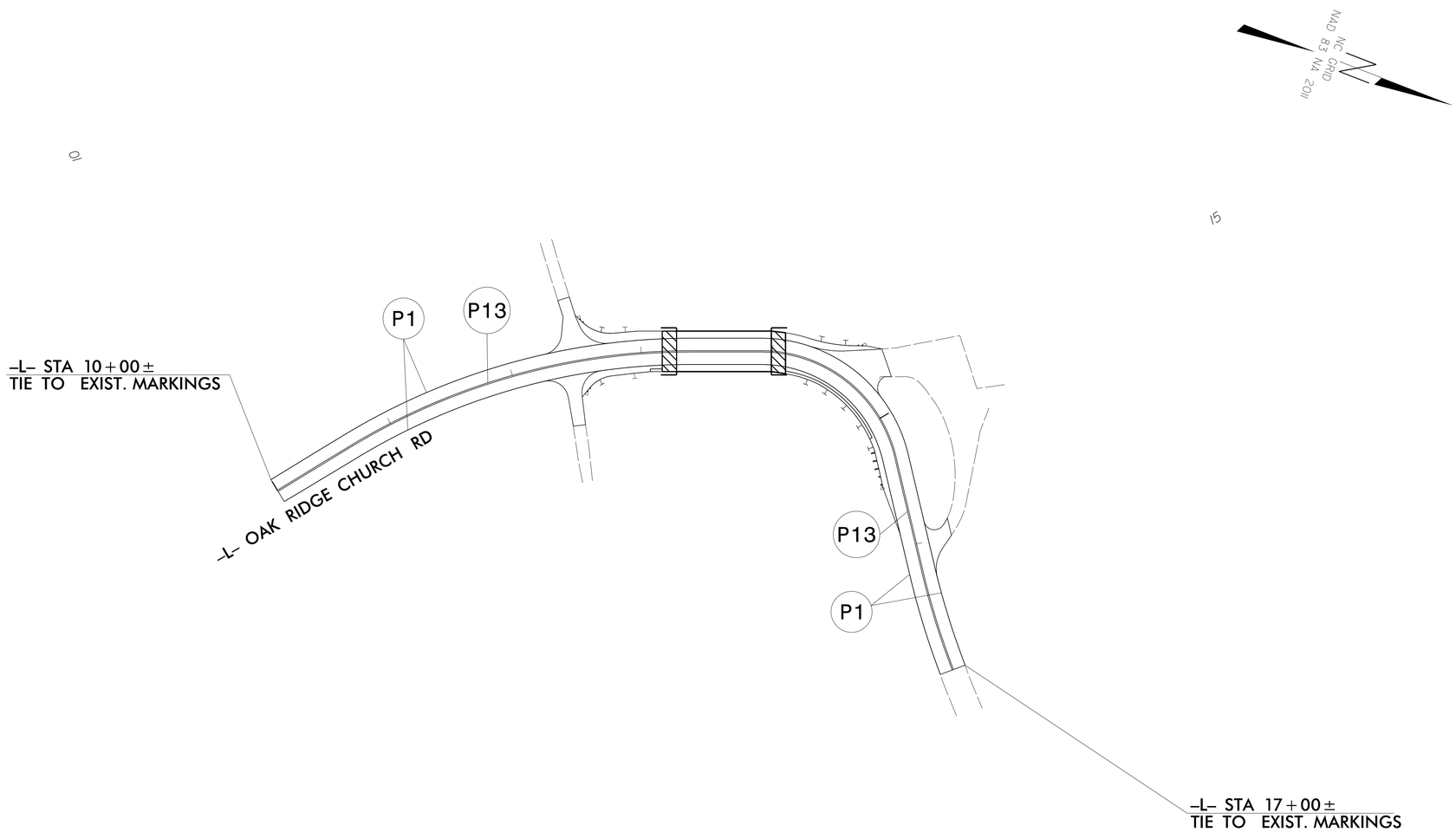

RS&H
1520 SOUTH BOULEVARD, SUITE 200
CHARLOTTE, NC 28203
NC FIRM LICENSE No: F-0493

PAVEMENT MARKING DETAIL

4/8/2025
R:\Traffic\Delineation\Wilkes280_PMP_dtL01.dgn
User:KrawczyS

PROJECT: BP11.R013

TIP

STATE	STATE PROJECT REFERENCE NO.	SHEET NO.	TOTAL SHEETS
N.C.	BP11.R013	EC-1	8

STATE PROJ. NO.	F.A. PROJ. NO.	DESCRIPTION
BP11.R013.1	N/A	PE
BP11.R013.2	N/A	RW, UTIL.
BP11.R013.3	N/A	CONST.

STATE OF NORTH CAROLINA
DIVISION OF HIGHWAYS

PLAN FOR PROPOSED
HIGHWAY EROSION CONTROL

WILKES COUNTY

NAD 83/
NA 2011

LOCATION: REPLACEMENT OF BRIDGE 960280 OVER CAMP BRANCH ON SR 1952 (OAK RIDGE CHURCH ROAD)

TYPE OF WORK: GRADING, PAVING, DRAINAGE & STRUCTURE (BRIDGE)

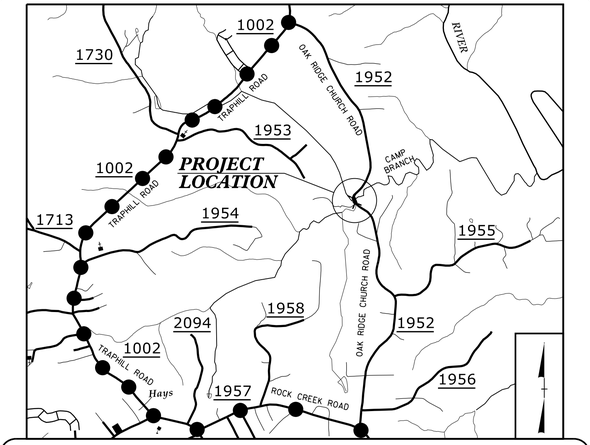

VICINITY MAP
NOT TO SCALE

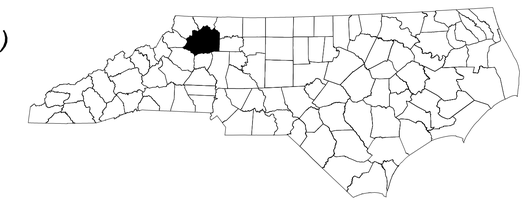

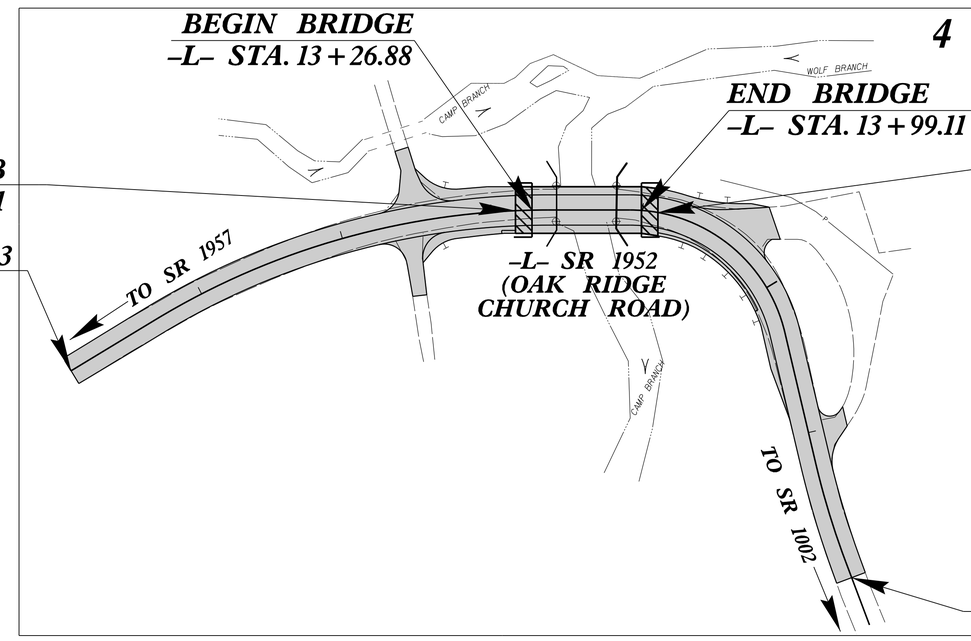

BEGIN BRIDGE
–L– STA. 13 + 26.88

END BRIDGE
–L– STA. 13 + 99.11

BEGIN APPROACH SLAB
–L– STA. 13 + 16.01

END APPROACH
–L– STA. 14 + 09.82

BEGIN PROJECT WBS BP11.R013
–L– STA. 10 + 00.00

END PROJECT WBS BP11.R013
–L– STA. 17 + 00.00

THIS PROJECT CONTAINS EROSION CONTROL PLANS FOR CLEARING AND GRUBBING PHASE OF CONSTRUCTION.

GRAPHIC SCALE

50 25 0 50 100
PLANS

THESE EROSION AND SEDIMENT CONTROL PLANS COMPLY WITH REGULATIONS SET FORTH BY THE NCG–010000 GENERAL STORMWATER CONSTRUCTION PERMIT ISSUED BY THE NORTH CAROLINA DEPARTMENT OF ENVIRONMENTAL QUALITY DIVISION OF ENERGY, MINERAL, AND LAND RESOURCES.

RS&H

Prepared in the Office of:

RS&H
8521 SIX FORKS ROAD, SUITE 400
RALEIGH, NC 27615
NC FIRM LICENSE No: F–0493

Designed by:

LILY MCKINNEY — ***4559***
NAME — *LEVEL III CERTIFICATION NO.*

Roadway Standard Drawings

The "Roadway Standard Drawings"- Roadway Design Unit - N. C. Department of Transportation - Raleigh, N. C., dated January 2024 and the latest revison thereto are applicable to this project and by reference hereby are considered a part of these plans.

14-MAR-2025 09:45
R:\Environmental\Design\BP11.R013_EC-1.dgn
jcyrenel

PROJECT REFERENCE NO.	SHEET NO.
BP11.R013	EC-2

DIVISION OF HIGHWAYS
STATE OF NORTH CAROLINA

EROSION & SEDIMENT CONTROL LEGEND

Std. #	Description	Symbol
1605.01	Temporary Silt Fence	
1606.01	Special Sediment Control Fence	
1622.01	Temporary Berms and Slope Drains	
1630.02	Silt Basin Type B	
1630.03	Temporary Silt Ditch	TSD
1630.04	Stilling Basin	
1630.05	Temporary Diversion	TD
1630.06	Special Stilling Basin	
1630.07	Skimmer Basin	
1630.08	Tiered Skimmer Basin	
1630.09	Earthen Dam with Skimmer	
	Infiltration Basin	
	Rock Inlet Sediment Trap:	
1632.01	Type A	A
1632.02	Type B	B
1632.03	Type C	C

Std. #	Description	Symbol
1633.01	Temporary Rock Silt Check Type A	
1633.02	Temporary Rock Silt Check Type B	
1633.03	Temporary Rock Silt Check Type A with Excelsior Matting and Flocculant	
1634.01	Temporary Rock Sediment Dam Type A	
1634.02	Temporary Rock Sediment Dam Type B	
1635.01	Rock Pipe Inlet Sediment Trap Type A	A
1635.02	Rock Pipe Inlet Sediment Trap Type B	B
1636.01	Excelsior Wattle Check	
1636.01	Excelsior Wattle Check with Flocculant	
1636.01	Coir Fiber Wattle Check	
1636.01	Coir Fiber Wattle Check with Flocculant	
1636.02	Silt Fence Excelsior Wattle Break	EW
	Silt Fence Coir Fiber Wattle Break	CFW
1636.03	Excelsior Wattle Barrier	—EW—EW—EW—
1636.03	Coir Fiber Wattle Barrier	—CFW—CFW—CFW—

PROJECT REFERENCE NO.	SHEET NO.
BP11.R013	EC-2A

SILT FENCE COIR FIBER WATTLE BREAK DETAIL

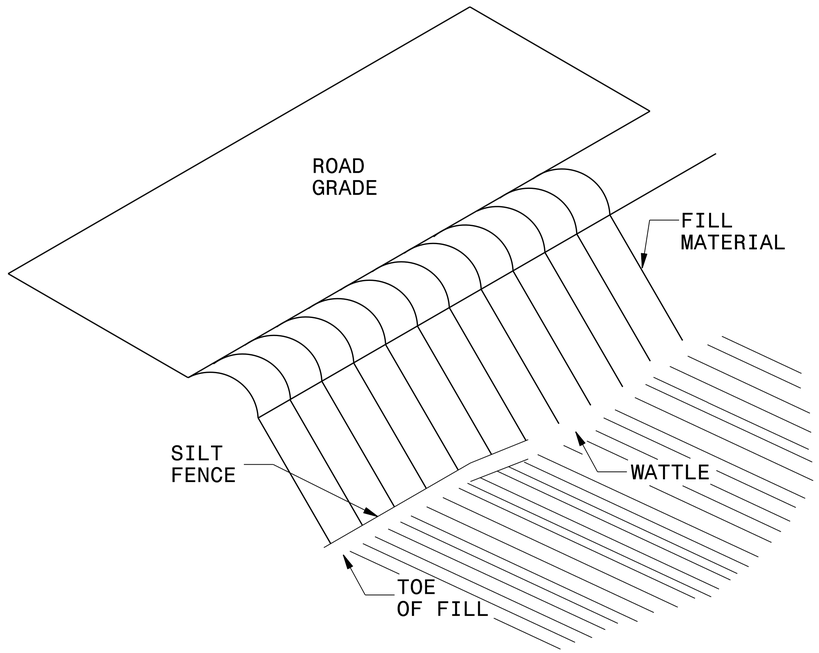

ISOMETRIC VIEW

NOTES:

USE MINIMUM 12 IN. DIAMETER COIR FIBER (COCONUT FIBER) WATTLE AND LENGTH OF 10 FT.

EXCAVATE A 1 TO 2 INCH TRENCH FOR WATTLE TO BE PLACED.

DO NOT PLACE WATTLE ON TOE OF SLOPE.

USE 2 FT. WOODEN STAKES WITH A 2 IN. BY 2 IN. NOMINAL CROSS SECTION.

INSTALL A MINIMUM OF 2 UPSLOPE STAKES AND 4 DOWNSLOPE STAKES AT AN ANGLE TO WEDGE WATTLE TO GROUND.

PROVIDE STAPLES MADE OF 11 GUAGE STEEL WIRE FORMED INTO A U SHAPE NOT LESS THAN 6″ IN LENGTH.

INSTALL STAPLES APPROXIMATELY EVERY 1 LINEAR FOOT ON BOTH SIDES OF WATTLE AND AT EACH END TO SECURE IT TO THE SOIL.

WATTLE INSTALLATION CAN BE ON OUTSIDE OF THE SILT FENCE AS DIRECTED.

INSTALL TEMPORARY SILT FENCE IN ACCORDANCE WITH SECTION 1605 OF THE STANDARD SPECIFICATIONS.

INSET A

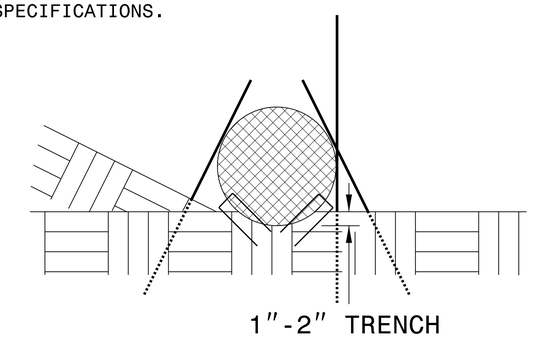

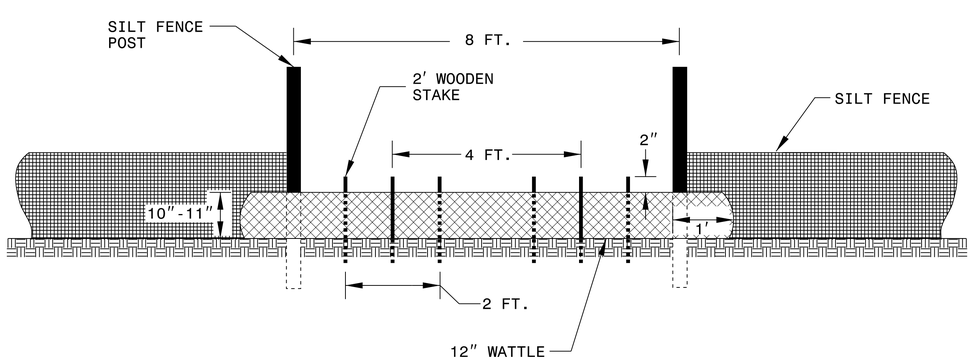

VIEW FROM SLOPE

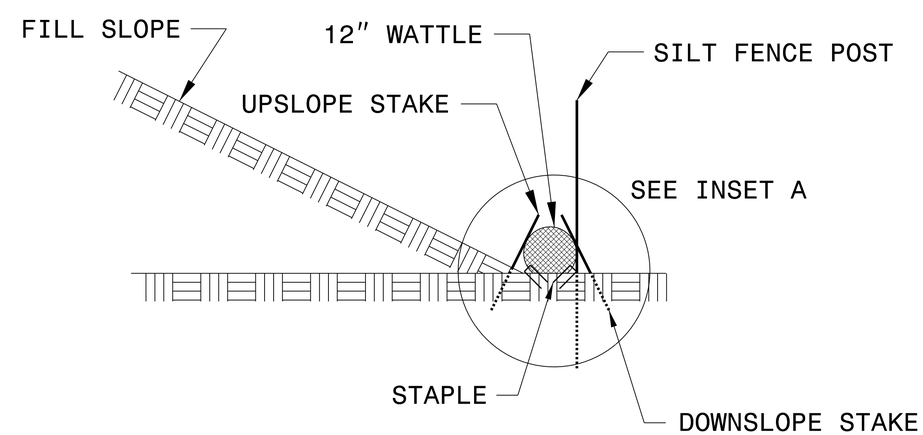

SIDE VIEW

PROJECT REFERENCE NO.	SHEET NO.
BPII.R013	EC-2B

ONSITE CONCRETE WASHOUT STRUCTURE WITH LINER

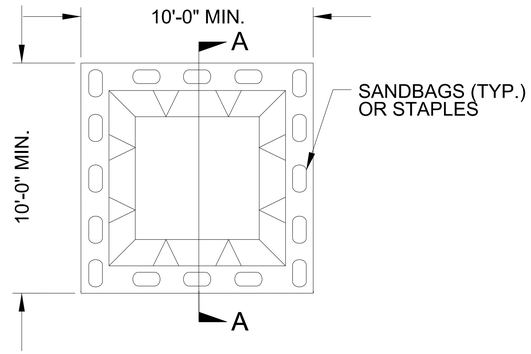

PLAN

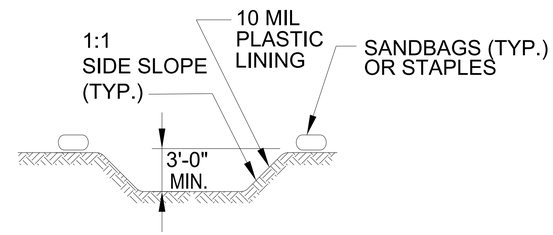

SECTION A-A

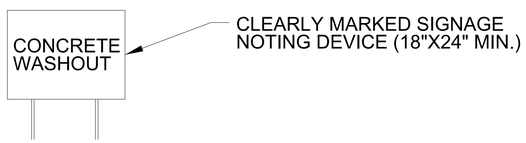

NOTES:
1. ACTUAL LOCATION DETERMINED IN FIELD

2. THE CONCRETE WASHOUT STRUCTURES SHALL BE MAINTAINED WHEN THE LIQUID AND/OR SOLID REACHES 75% OF THE STRUCTURES CAPACITY TO PROVIDE ADEQUATE HOLDING CAPACITY WITH A MINIMUM 12 INCHES OF FREEBOARD.

3.CONCRETE WASHOUT STRUCTURE NEEDS TO BE CLEARY MARKED WITH SIGNAGE NOTING DEVICE.

BELOW GRADE WASHOUT STRUCTURE

NOT TO SCALE

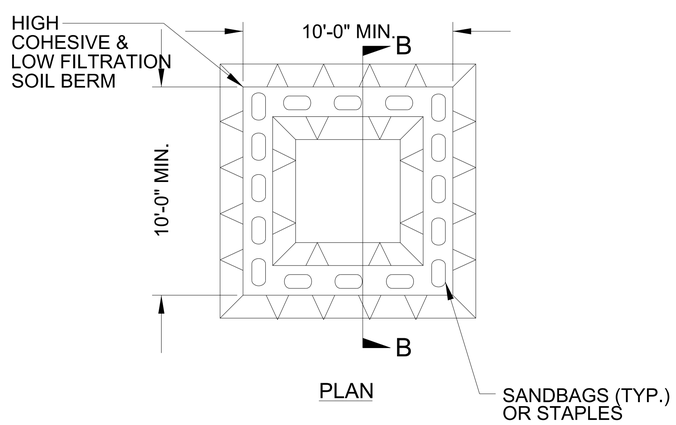

PLAN

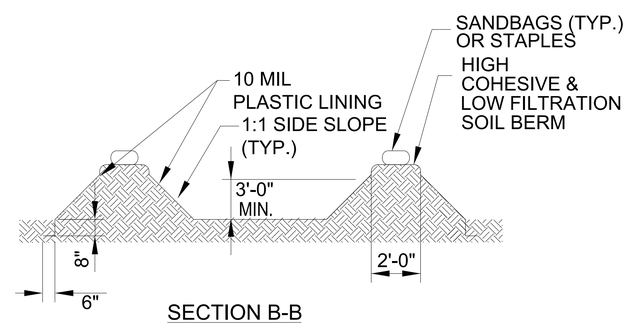

SECTION B-B

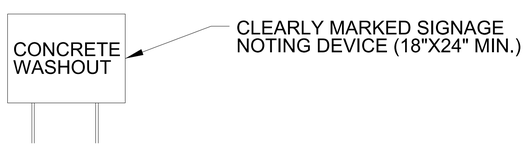

NOTES:
1. ACTUAL LOCATION DETERMINED IN FIELD

2. THE CONCRETE WASHOUT STRUCTURES SHALL BE MAINTAINED WHEN THE LIQUID AND/OR SOLID REACHES 75% OF THE STRUCTURES CAPACITY TO PROVIDE ADEQUATE HOLDING CAPACITY WITH A MINIMUM 12 INCHES OF FREEBOARD.

3.CONCRETE WASHOUT STRUCTURE NEEDS TO BE CLEARY MARKED WITH SIGNAGE NOTING DEVICE.

ABOVE GRADE WASHOUT STRUCTURE

NOT TO SCALE

PROJECT REFERENCE NO.	SHEET NO.
BP11.R013	EC-3

DIVISION OF HIGHWAYS
STATE OF NORTH CAROLINA

SOIL STABILIZATION SUMMARY SHEET

SLOPE MATTING FOR EROSION CONTROL

CONST SHEET NO.	LINE	FROM STATION	TO STATION	SIDE	ESTIMATE (SY)
4	-L-	13+98	14+50	LT	82
4	-L-	12+55	13+26	RT	155
			SUBTOTAL		237
MISCELLANEOUS MATTING TO BE INSTALLED AS DIRECTED BY THE ENGINEER					763
				TOTAL	1000

TYPE 1 PSRM MATTING FOR EROSION CONTROL

CONST SHEET NO.	LINE	FROM STATION	TO STATION	SIDE	ESTIMATE (SY)
4	-L-	15+00	17+00	LT	180
			SUBTOTAL		180
				TOTAL	200

PROJECT REFERENCE NO.	SHEET NO.
BP11.R013	EC-3A

DIVISION OF HIGHWAYS
STATE OF NORTH CAROLINA

SOIL STABILIZATION TIMEFRAMES

SITE DESCRIPTION	STABILIZATION TIME	TIMEFRAME EXCEPTIONS
PERIMETER DIKES, SWALES, DITCHES AND SLOPES	7 DAYS	NONE
HIGH QUALITY WATER (HQW) ZONES	7 DAYS	NONE
SLOPES STEEPER THAN 3:1	7 DAYS	IF SLOPES ARE 10' OR LESS IN LENGTH AND ARE NOT STEEPER THAN 2:1, 14 DAYS ARE ALLOWED.
SLOPES 3:1 TO 4:1	14 DAYS	7 DAYS FOR SLOPES GREATER THAN 50' IN LENGTH WITH SLOPES STEEPER THAN 4:1. 7 DAYS FOR PERIMETER DIKES, SWALES, DITCHES PERIMETER SLOPES, AND HQW ZONES
ALL OTHER AREAS WITH SLOPES FLATTER THAN 4:1	14 DAYS	7 DAYS FOR PERIMETER DIKES, SWALES, DITCHES PERIMETER SLOPES, AND HQW ZONES

PROJECT REFERENCE NO.	SHEET NO.
BPII.R013	EC-4/CONST.4

RS&H
1520 SOUTH BOULEVARD, SUITE 200
CHARLOTTE, NC 28203
NC FIRM LICENSE No: F-0493

NOTE:
THE EXISTING DRAINAGE DITCHES ARE ALL STABLE AND HAVE NO SIGNS OF EROSION. ALL THREE EXISTING DRIVEWAY PIPES ARE IN POOR CONDITION. THERE ARE NO SIGNS OF SCOUR UNDER THE EXISTING BRIDGE, AND THE UPSTREAM CMP IS IN GOOD CONDITION.

-L- CURVE DATA

PI Sta 12+04.87	PI Sta 14+74.70	PI Sta 16+55.22
Δ = 31° 11' 34.2" (RT)	Δ = 76° 43' 17.5" (RT)	Δ = 7° 20' 50.3" (LT)
D = 11° 27' 33.0"	D = 54° 34' 02.7"	D = 10° 54' 48.5"
L = 272.21'	L = 140.60'	L = 67.32'
T = 139.57'	T = 83.10'	T = 33.71'
R = 500.00'	R = 105.00'	R = 525.00'
SE = 03	SE = 04	SE = SEE PLANS
RO = SEE PLANS	RO = SEE PLANS	RO = SEE PLANS
DS = 25	DS = 20	DS = N/A

DETAIL A
CUT DITCH
(Not to Scale)

FROM -L- STA. 15+00 TO STA. 17+00 LT

DETAIL B
TOE PROTECTION
(Not to Scale)

FROM -L- STA. 12+00 TO STA. 12+31 RT
EST 23 TONS CLASS "B" RIP RAP
EST 41 SY GEOTEXTILE

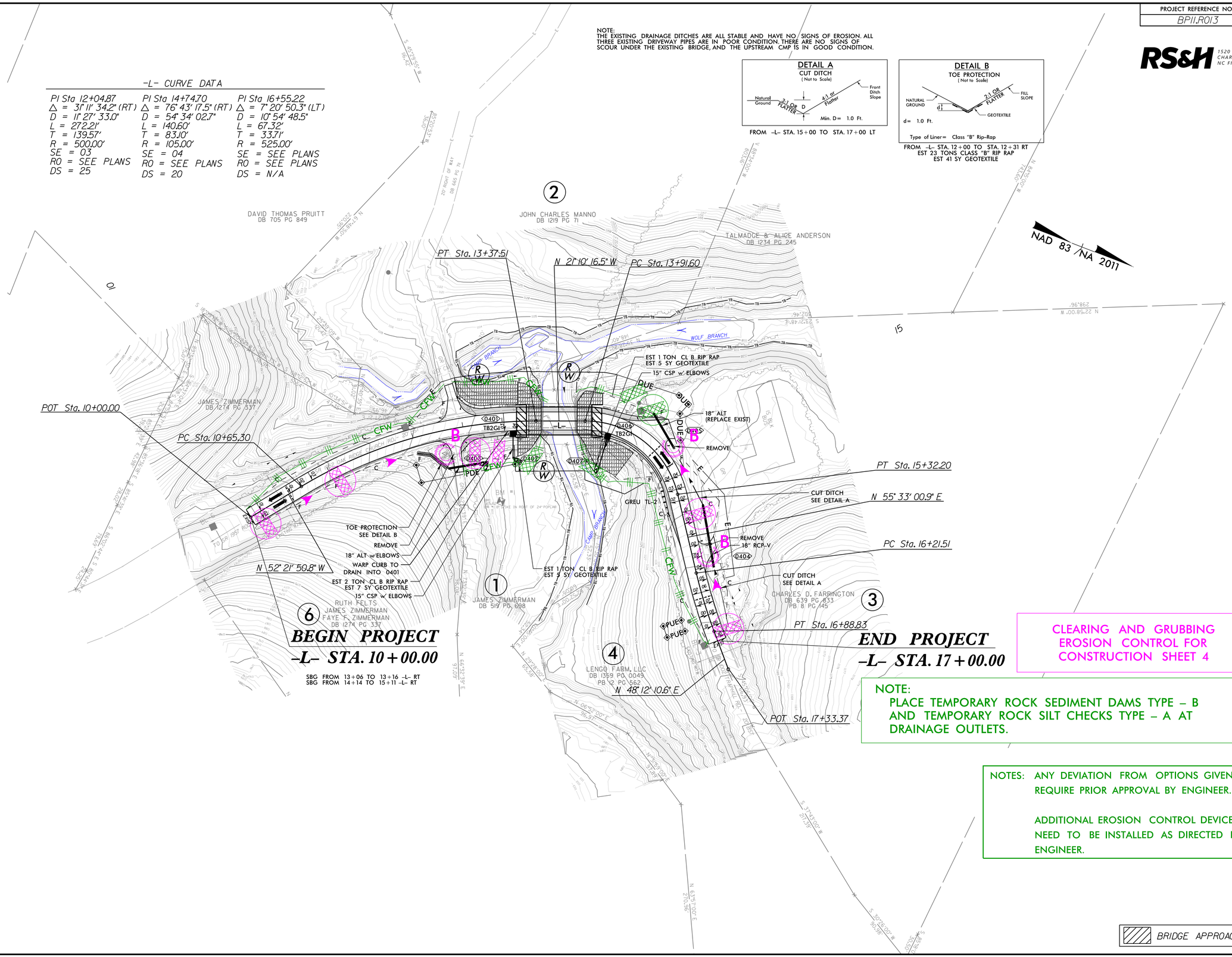

CLEARING AND GRUBBING
EROSION CONTROL FOR
CONSTRUCTION SHEET 4

NOTE:
PLACE TEMPORARY ROCK SEDIMENT DAMS TYPE – B AND TEMPORARY ROCK SILT CHECKS TYPE – A AT DRAINAGE OUTLETS.

NOTES: ANY DEVIATION FROM OPTIONS GIVEN WILL REQUIRE PRIOR APPROVAL BY ENGINEER.

ADDITIONAL EROSION CONTROL DEVICES MAY NEED TO BE INSTALLED AS DIRECTED BY THE ENGINEER.

8/17/99
08-APR-2025 09:44
R:\Environmental\Design\BPII.R013_EC-4_C&G.dgn
$$$$USERNAME$$$$

PROJECT REFERENCE NO.	SHEET NO.
BPII.R013	EC-5/CONST.4

RS&H
1520 SOUTH BOULEVARD, SUITE 200
CHARLOTTE, NC 28203
NC FIRM LICENSE No: F-0493

-L- CURVE DATA

PI Sta 12+04.87	PI Sta 14+74.70	PI Sta 16+55.22
△ = 31° 11' 34.2" (RT)	△ = 76° 43' 17.5" (RT)	△ = 7° 20' 50.3" (LT)
D = 11° 27' 33.0"	D = 54° 34' 02.7"	D = 10° 54' 48.5"
L = 272.21'	L = 140.60'	L = 67.32'
T = 139.57'	T = 83.10'	T = 33.71'
R = 500.00'	R = 105.00'	R = 525.00'
SE = 03	SE = 04	SE = SEE PLANS
RO = SEE PLANS	RO = SEE PLANS	RO = SEE PLANS
DS = 25	DS = 20	DS = N/A

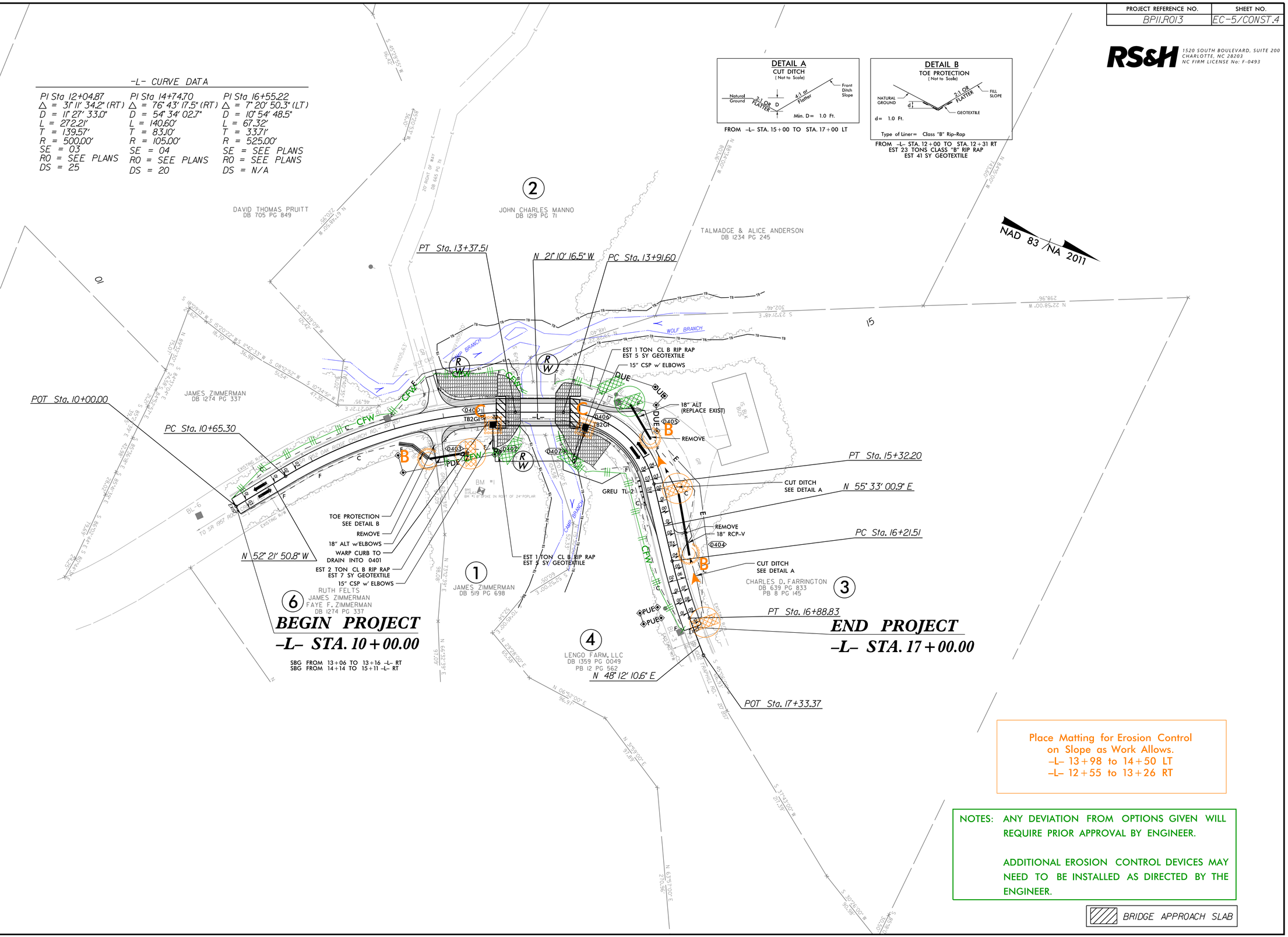

Place Matting for Erosion Control
on Slope as Work Allows.
-L- 13+98 to 14+50 LT
-L- 12+55 to 13+26 RT

NOTES: ANY DEVIATION FROM OPTIONS GIVEN WILL REQUIRE PRIOR APPROVAL BY ENGINEER.

ADDITIONAL EROSION CONTROL DEVICES MAY NEED TO BE INSTALLED AS DIRECTED BY THE ENGINEER.

BRIDGE APPROACH SLAB

08/21/24

WBS PROJECT: BP11.R013

CONTRACT:

STATE OF NORTH CAROLINA
DIVISION OF HIGHWAYS

T.I.P. NO.	SHEET NO.
BR11.R013	UC–1

UTILITY CONSTRUCTION PLANS
WILKES COUNTY

LOCATION: BRIDGE 960280 OVER CAMP BRANCH
ON SR 1952 (OAK RIDGE CHURCH ROAD)

TYPE OF WORK: RELOCATION OF 6" WATER LINE

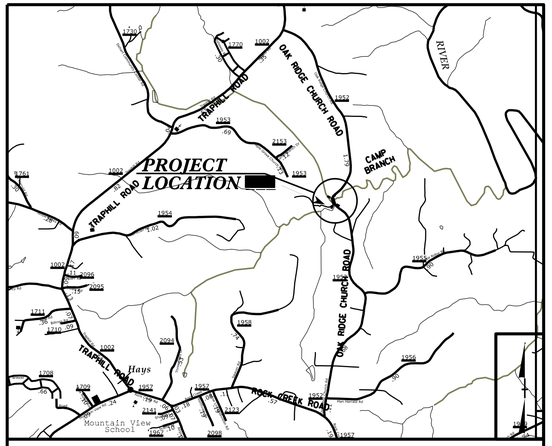

VICINITY MAP N.T.S

NAD 83/NA 2011

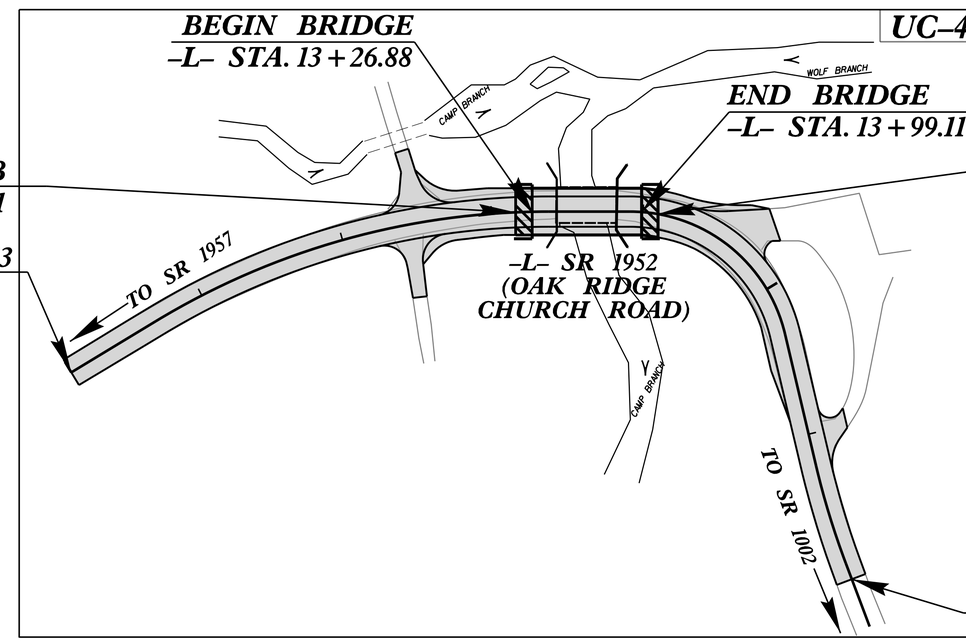

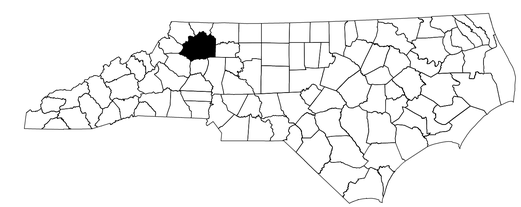

DOCUMENT NOT CONSIDERED FINAL UNTIL ALL SIGNATURES ARE COMPLETED

GRAPHIC SCALES

50 25 0 50 100
PLANS

50 25 0 50 100
PROFILE (HORIZONTAL)

5 2.5 0 5 10
PROFILE (VERTICAL)

INDEX OF SHEETS

SHEET NO.:	DESCRIPTION:
UC–1	TITLE SHEET
UC–2	UTILITY SYMBOLOGY
UC–3	NOTES
UC–3A THRU UC–3B	DETAILS
UC–4 THRU UC–4A	UTILITY CONSTRUCTION SHEETS

WATER OWNER ON PROJECT

(A) WATER – BLUE RIDGE WATER ASSOCIATION

PREPARED IN THE OFFICE OF
JOHNSON, MIRMIRAN, & THOMPSON, INC.
514 SOUTH STRATFORD ROAD, #220
WINSTON-SALEM, NORTH CAROLINA
336.842.8294

Marie Peedin, P.E.	PROJECT ENGINEER
Emily Morris, EIT	PROJECT UTILITY DESIGNER
Benjamin Wilson, EIT	PROJECT UTILITY DESIGNER

SEAL
NORTH CAROLINA PROFESSIONAL SEAL 027212 ENGINEER BENJAMIN U. WILSON
4/10/2025 10:58:22 AM EDT

DIVISION OF HIGHWAYS
UTILITIES UNIT
1555 MAIL SERVICES CENTER
RALEIGH NC 27699-1555
PHONE (919) 707-6690
FAX (919) 250-4151

Brandon Greer	DIVISION UTILITY ENGINEER
Amy D. York	WESTERN UTILITY ENGINEER

4/10/2025 10:58:22 PM
...\Design\Wilkes280_utl_UC1.dgn
User:EMorris2

PROJECT REFERENCE NO.	SHEET NO.
BP11.R013	UC-2

STATE OF NORTH CAROLINA
DIVISION OF HIGHWAYS

UTILITIES PLAN SHEET SYMBOLS

PROPOSED WATER SYMBOLS

- Water Line (Sized as Shown) — 12" WL
- 11¼ Degree Bend
- 22½ Degree Bend
- 45 Degree Bend
- 90 Degree Bend
- Plug
- Tee
- Cross
- Reducer
- Gate Valve — GV
- Butterfly Valve — BV
- Tapping Valve — TGV
- Line Stop — LS
- Line Stop with Bypass — LS/BP
- Blow Off — BO
- Fire Hydrant — PFH
- Relocate Fire Hydrant — RFH
- Remove Fire Hydrant — REM FH
- Water Meter — PWM
- Relocate Water Meter — RWM
- Remove Water Meter — REM WM
- Water Pump Station — PSTW
- RPZ Backflow Preventer — PRPZ
- DCV Backflow Preventer — PBFP
- Relocate RPZ Backflow Preventer — RRPZ
- Relocate DCV Backflow Preventer — RBFP

PROPOSED SEWER SYMBOLS

- Gravity Sewer Line (Sized as Shown) — 12" SS
- Force Main Sewer Line (Sized as Shown) — 12" FSS
- Manhole (Sized per Note)
- Sewer Pump Station — PSTSS

PROPOSED MISCELLANOUS UTILITIES SYMBOLS

- Power Pole
- Telephone Pole
- Joint Use Pole
- Telephone Pedestal — TEL PED
- Utility Line by Others (Type as Shown) — PROP O/H POW LINES
- Trenchless Installation — 12" TL INSTALL
- Encasement by Open Cut — 24" ENCAS BY OC
- Encasement — 24" ENCASEMENT
- Thrust Block
- Air Release Valve — AR
- Utility Vault — UV
- Concrete Pier — CP
- Steel Pier — SP
- Plan Note — NOTE
- Pay Item Note — PAY ITEM

EXISTING UTILITIES SYMBOLS

- Power Pole
- Telephone Pole
- Joint Use Pole
- Utility Pole
- Utility Pole with Base
- H-Frame Pole
- Power Transmission Line Tower
- Water Manhole
- Power Manhole
- Telephone Manhole
- Sanitary Sewer Manhole
- Hand Hole for Cable
- Power Transformer
- Telephone Pedestal
- CATV Pedestal
- Gas Valve
- Gas Meter
- Located Miscellaneous Utility Object
- Abandoned According to Utility Records — AATUR
- End of Information — E.O.I.
- *Underground Power Line — P
- *Underground Telephone Cable — T
- *Underground Telephone Conduit — TC
- *Underground Fiber Optics Telephone Cable — T FO
- *Underground TV Cable — TV
- *Underground Fiber Optics TV Cable — TV FO
- *Underground Gas Pipeline — G
- Aboveground Gas Pipeline — A/G Gas
- *Underground Water Line
- Aboveground Water Line — A/G Water
- *Underground Gravity Sanitary Sewer Line — SS
- Aboveground Gravity Sanitary Sewer Line — A/G Sanitary Sewer
- *Underground SS Forced Main Line — FSS
- Underground Unknown Utility Line — ?UTL
- SUE Test Hole
- Water Meter
- Water Valve
- Fire Hydrant
- Sanitary Sewer Cleanout

*For Existing Utilities

- Utility Line Drawn from Record (Type as Shown)
- Designated Utility Line (Type as Shown)

REV: 2/1/2012

WILKES COUNTY

PROJECT REFERENCE NO.	SHEET NO.
BP11.R013	UC-3

DESIGNED BY: MUP
DRAWN BY: BDW
CHECKED BY: MUP
APPROVED BY: MUP
REVISED:

NORTH CAROLINA
DEPARTMENT OF
TRANSPORTATION

UTILITIES ENGINEERING SEC.
PHONE:(919)707-6690
FAX:(919)250-4151

SEAL 20212
MARIE UMPHLETT PEEDIN

Signed by:
Marie U. Peedin
4/10/2025 | 2:08:27 PM EDT

UTILITY CONSTRUCTION
PLANS ONLY

UTILITY CONSTRUCTION

DOCUMENT NOT CONSIDERED FINAL
UNLESS ALL SIGNATURES COMPLETED

UTILITY CONSTRUCTION

GENERAL NOTES:

1. THE PROPOSED UTILITY CONSTRUCTION SHALL MEET THE APPLICABLE REQUIREMENTS OF THE NC DEPARTMENT OF TRANSPORTATION'S "STANDARD SPECIFICATIONS FOR ROADS AND STRUCTURES" DATED JANUARY 2024.

2. THE EXISTING UTILITIES BELONG TO BLUE RIDGE WATER ASSOCIATION. PLEASE CONTACT MR. GREG REAVIS, GENERAL MANAGER OF BLUE RIDGE WATER ASSOCIATION.
4083 AIPRORT ROAD, HAYS, NC 28635
(336) 696-4713
service@blueridgewa.org

3. ALL WATER LINES TO BE INSTALLED WITHIN COMPLIANCE OF THE RULES AND REGULATIONS OF THE NORTH CAROLINA DEPARTMENT OF ENVIRONMENTAL QUALITY, DIVISION OF WATER RESOURCES, PUBLIC WATER SUPPLY SECTION. ALL SEWER LINES TO BE INSTALLED WITHIN COMPLIANCE OF THE RULES AND REGULATIONS OF THE NORTH CAROLINA DEPARTMENT OF ENVIRONMENT QUALITY, DIVISION OF WATER RESOURCES, WATER QUALITY SECTION. PERFORM ALL WORK IN ACCORDANCE WITH THE APPLICABLE PLUMBING CODES.

4. THE UTILITY OWNER OWNS THE EXISTING UTILITY FACILITIES AND WILL OWN THE NEW UTILITY FACILITIES AFTER ACCEPTANCE BY THE DEPARTMENT. THE DEPARTMENT OWNS THE CONSTRUCTION CONTRACT AND HAS ADMINISTRATIVE AUTHORITY. COMMUNICATIONS AND DECISIONS BETWEEN THE CONTRACTOR AND UTILITY OWNER ARE NOT BINDING UPON THE DEPARTMENT OR THIS CONTRACT UNLESS AUTHORIZED BY THE ENGINEER. AGREEMENTS BETWEEN THE UTILITY OWNER AND CONTRACTOR FOR THE WORK THAT IS NOT PART OF THIS CONTRACT OR IS SECONDARY TO THIS CONTRACT ARE ALLOWED, BUT ARE NOT BINDING UPON THE DEPARTMENT.

5. PROVIDE ACCESS FOR THE DEPARTMENT PERSONNEL AND THE OWNER'S REPRESENTATIVES TO ALL PHASES OF CONSTRUCTION. NOTIFY DEPARTMENT PERSONNEL AND THE UTILITY OWNER TWO WEEKS PRIOR TO COMMENCEMENT OF ANY WORK AND ONE WEEK PRIOR TO SERVICE INTERRUPTION. KEEP UTILITY OWNERS' REPRESENTATIVES INFORMED OF WORK PROGRESS AND PROVIDE OPPORTUNITY FOR INSPECTION OF CONSTRUCTION AND TESTING.

6. THE PLANS DEPICT THE BEST AVAILABLE INFORMATION FOR THE LOCATION, SIZE, AND TYPE OF MATERIAL FOR ALL EXISTING UTILITIES. MAKE INVESTIGATIONS FOR DETERMINING THE EXACT LOCATION, SIZE, AND TYPE MATERIAL OF THE EXISTING FACILITIES AS NECESSARY FOR THE CONSTRUCTION OF THE PROPOSED UTILITIES AND FOR AVOIDING DAMAGE TO EXISTING FACILITIES. REPAIR ANY DAMAGE INCURRED TO EXISTING FACILITIES TO THE ORIGINAL OR BETTER CONDITION AT NO ADDITIONAL COST TO THE DEPARTMENT.

7. MAKE FINAL CONNECTIONS OF THE NEW WORK TO THE EXISTING SYSTEM WHERE INDICATED ON THE PLANS, AS REQUIRED TO FIT THE ACTUAL CONDITIONS, OR AS DIRECTED.

8. MAKE CONNECTIONS BETWEEN EXISTING AND PROPOSED UTILITIES AT TIMES MOST CONVENIENT TO THE PUBLIC, WITHOUT ENDANGERING THE UTILITY SERVICE, AND IN ACCORDANCE WITH THE UTILITY OWNER'S REQUIREMENTS. MAKE CONNECTIONS ON WEEKENDS, AT NIGHT, AND ON HOLIDAYS IF NECESSARY.

9. ALL UTILITY MATERIALS SHALL BE APPROVED PRIOR TO DELIVERY TO THE PROJECT. SEE 1500-7, " SUBMITTALS AND RECORDS" IN SECTION 1500 OF THE STANDARD SPECIFICATIONS.

PROJECT SPECIFIC NOTES:

1. DEVIATION FROM THESE PLANS AND NOTES WITHOUT THE PRIOR CONSENT OF THE UTILITY OWNER OR THEIR REPRESENTATIVE OR THE ENGINEER MAY BE CAUSE FOR THE WORK TO BE UNACCEPTABLE.

2. THE LOCATION OF EXISTING UTILITIES SHOWN ON THE PLANS IS FOR THE USE OF THE CONTRACTOR IN PROVIDING PROTECTION FOR THE UTILITIES DURING CONSTRUCTION OPERATIONS. NCDOT, DESIGN CONSULTANT AND/OR AGENT SHALL NOT BE HELD RESPONSIBLE FOR THE ACCURACY OF LOCATION, SIZE, DEPTH, OR COMPLETENESS OF THE INFORMATION. THE CONTRACTOR SHALL VERIFY LOCATION AND DEPTH OF ALL UNDERGROUND UTILITIES PRIOR TO CONSTRUCTION.

3. CONTRACTOR SHALL COORDINATE ALL WORK WITH UTILITY OWNER AT LEAST 48 HOURS PRIOR TO THE START OF CONSTRUCTION, OR AS OTHERWISE SPECIFIED HEREIN.

4. ALL NCDEQ AND LOCAL TESTING MUST BE COMPLETED AND APPROVED PRIOR TO CONNECTING THE NEW CONSTRUCTION TO THE EXISTING WATER LINES.

LIST OF STANDARD DRAWINGS

1515.01 WATER METER
IN-LINE VALVE DETAIL
VALVE BOX INSTALLATION
THRUST BLOCKING TABLE
THRUST BLOCKING
PIPE RESTRAINT CHARTS
TYPICAL TRACER WIRE INSTALLATION DETAIL

5/14/99

WILKES COUNTY

PROJECT REFERENCE NO.	SHEET NO.
BP11.R013	UC-3A
DESIGNED BY: MUP	
DRAWN BY: BDW	
CHECKED BY: MUP	
APPROVED BY: MUP	
REVISED:	
NORTH CAROLINA DEPARTMENT OF TRANSPORTATION	
UTILITIES ENGINEERING SEC. PHONE:(919)707-6690 FAX:(919)250-4151	UTILITY CONSTRUCTION PLANS ONLY

NORTH CAROLINA PROFESSIONAL SEAL 20212 ENGINEER UMPHLETT, BRADLEY RESDIN

Signed by: 4/20/2022 | 1:25:50 PM EDT

PROJECT TYPICAL DETAILS

UTILITY CONSTRUCTION

DOCUMENT NOT CONSIDERED FINAL UNLESS ALL SIGNATURES COMPLETED

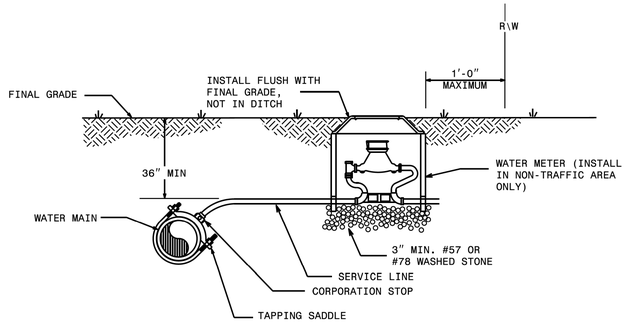

NOTES:

1. THIS DETAIL SHOWS THE TYPICAL FINAL WATER METER CONFIGURATION AFTER INSTALLATION OF A PROPOSED WATER METER, RECONNECTION OF AN EXISTING WATER METER, OR RELOCATION OF A WATER METER.

STATE OF NORTH CAROLINA DEPT. OF TRANSPORTATION DIVISION OF HIGHWAYS RALEIGH, N.C.

1-24

ROADWAY STANDARD DRAWING FOR **WATER METER**

SHEET 1 OF 1

1515.01

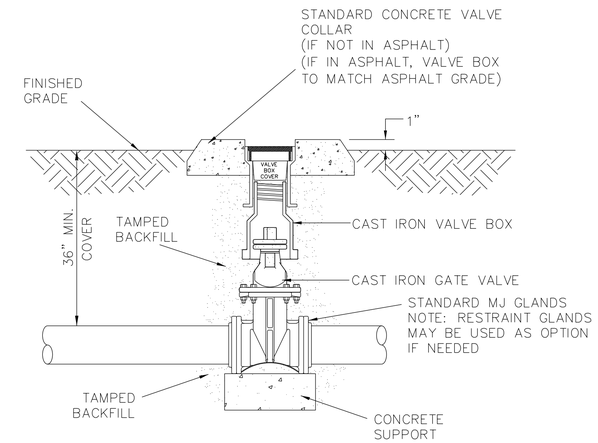

INLINE VALVE DETAIL

NOT TO SCALE

NOTE: CONCRETE VALVE COLLAR REQUIRED ON ALL VALVES.

APPROVED METHOD FOR EXTENSION OF VALVE BOX

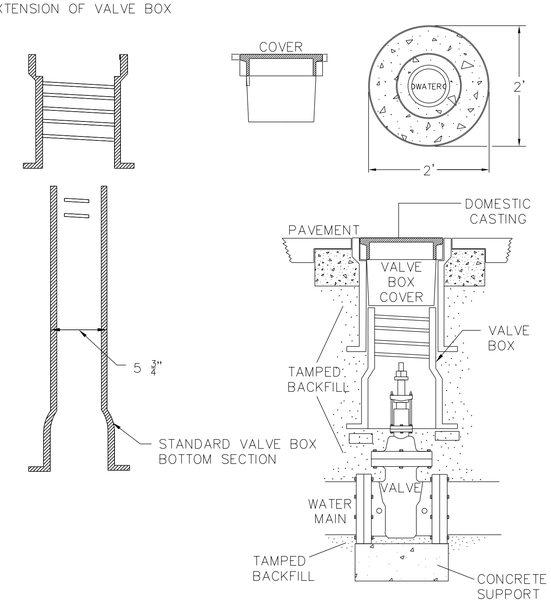

NOTE:
VALVE BOX SHALL BE PER OWNER'S SPECIFICATIONS.

VALVE BOX INSTALLATION

NOT TO SCALE

2/20/2025 10:20:08 AM
jsetzer
jsetzer:MUP:wkes280_ut1_UC3.dgn

5/14/99

WILKES COUNTY

PROJECT REFERENCE NO.	SHEET NO.
BP11.R013	UC-3B

DESIGNED BY: MUP
DRAWN BY: BDW
CHECKED BY: MUP
APPROVED BY: MUP
REVISED:

NORTH CAROLINA DEPARTMENT OF TRANSPORTATION

UTILITIES ENGINEERING SEC.
PHONE:(919)707-6690
FAX:(919)250-4151

NORTH CAROLINA PROFESSIONAL SEAL 20212 UTILITIES ENGINEER MICHAEL T. UMPHLETT
Signed by:
4/16/2025 | 10:19 AM EDT

UTILITY CONSTRUCTION PLANS ONLY

PROJECT TYPICAL DETAILS

UTILITY CONSTRUCTION

DOCUMENT NOT CONSIDERED FINAL UNLESS ALL SIGNATURES COMPLETED

TEST PRESSURE = 200 PSI					
PIPE SIZE	TYPE FITTING	DIMENSIONS (FT) "L"	"H"	"T"	VOLUME CONCRETE CU. YD.
<4 INCHES	11 1/4°	1.00	1.00	1.00	0.04
	22 1/2°	1.00	1.00	1.50	0.06
	45°	1.00	1.00	1.50	0.06
	90°	1.50	1.50	2.50	0.15
	TEE	1.50	1.50	2.00	0.12
4 INCHES	11 1/4°	1.00	1.00	2.50	0.09
	22 1/2°	1.00	1.00	2.50	0.09
	45°	1.50	1.50	2.50	0.15
	90°	1.50	1.50	2.50	0.15
	TEE	1.50	1.50	2.00	0.12
6 INCHES	11 1/4°	1.50	1.50	2.50	0.15
	22 1/2°	1.50	1.50	2.50	0.15
	45°	1.50	1.50	2.50	0.15
	90°	2.50	2.00	3.00	0.33
	TEE	2.50	2.00	2.50	0.28
8 INCHES	11 1/4°	2.00	2.00	2.50	0.23
	22 1/2°	2.00	2.00	2.50	0.23
	45°	2.00	2.00	2.75	0.23
	90°	4.00	2.00	3.00	0.50
	TEE	4.00	2.00	2.50	0.42
12 INCHES	11 1/4°	2.00	2.00	3.00	0.28
	22 1/2°	3.00	2.00	3.00	0.39
	45°	4.00	2.50	3.00	0.61
	90°	5.50	3.00	3.50	1.13
	TEE	5.50	3.00	3.00	0.97
16 INCHES	11 1/4°	2.00	2.00	3.00	0.28
	22 1/2°	4.00	2.00	3.00	0.50
	45°	5.50	3.00	3.50	1.13
	90°	7.50	4.00	3.50	2.01
	TEE	7.50	4.00	3.00	1.72

CHART NOTES:
1. IF BLOCKING EXCAVATION IS IN LIGHTLY COMPACTED FILL AREAS, OR IN AREAS WHERE BOULDERS OR STUMPS HAVE BEEN REMOVED, BLOCKING SIZE MUST BE RE-SIZED FOR THE SPECIFIC LOCATION/CIRCUMSTANCE BY A NC LICENSED PROFESSIONAL ENGINEER.
2. BLOCKING SIZES SHOWN IN THESE TABLES ASSUME THE FOLLOWING:
   a. BLOCKING IS CONSTRUCTED IN RESIDUAL SOILS AS SHOWN IN DETAIL
   b. SOIL BEARING PRESSURE = 2000 PSF
   c. VELOCITY OF FLOW = 15 FPS
3. THIS DETAIL NOT APPLICABLE TO REDUCING BENDS.
4. NEITHER THE WEIGHT OF THE CONCRETE BLOCKING NOR FRICTION BETWEEN CONCRETE BLOCKING AND SOIL WAS ADDED INTO BLOCKING SIZES COMPUTATION. THEREFORE, BLOCKING SIZE IS CONSERVATIVE.

THRUST BLOCKING TABLE

NOT TO SCALE

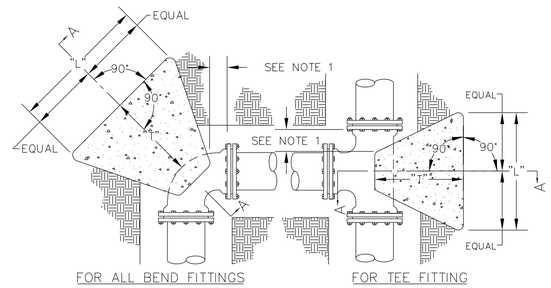

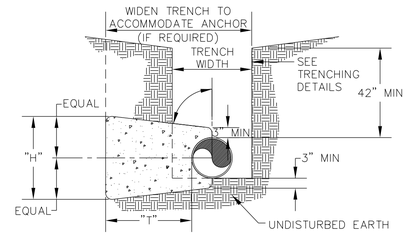

SECTION A-A

NOTES:
1. CONCRETE BLOCKING IS TO BE FORMED TO ENSURE ACCESSIBILITY TO FITTINGS AND POURED AGAINST UNDISTURBED EARTH.
2. ALL FITTINGS SHALL BE WRAPPED IN POLYETHYLENE TO PREVENT CONCRETE FROM CONTACTING FITTINGS, BOLTS OR ENDS OF MECHANICAL JOINT BENDS.
3. CONCRETE TO BE MINIMUM 3,000 PSI @ 28 DAYS.
4. WHEN SACKRETE IS TO BE USED, IT SHALL BE PROPERLY MIXED PER MANUFACTURER SPECIFICATIONS.
5. FOR REQUIRED DIMENSIONS, SEE THRUST BLOCKING TABLE.

THRUST BLOCKING

NOT TO SCALE

PIPE RESTRAINT CHARTS

Horizontal & Vertical Up Bends

Pipe Size (inch)	Bend Angle	Pipeline Restraint Req. (feet)
4"	11.25	2
	22.5	5
	30	6
	45	10
	60	14
	90	24
6"	11.25	3
	22.5	7
	30	9
	45	14
	60	19
	90	33
8"	11.25	4
	22.5	9
	30	11
	45	18
	60	25
	90	43
10"	11.25	5
	22.5	10
	30	14
	45	21
	60	30
	90	52
12"	11.25	6
	22.5	12
	30	16
	45	25
	60	35
	90	60
16"	11.25	7
	22.5	13
	45	27
	90	65
24"	11.25	9
	22.5	18
	45	37
	90	90

Vertical Down Bends

Pipe Size (inch)	Bend Angle	Pipeline Restraint Req. (feet)
4"	11.25	4
	22.5	8
	30	11
	45	17
	60	24
	90	41
6"	11.25	8
	22.5	12
	30	16
	45	24
	60	34
	90	59
8"	11.25	7
	22.5	15
	30	20
	45	31
	60	44
	90	76
10"	11.25	9
	22.5	18
	30	25
	45	38
	60	53
	90	92
12"	11.25	11
	22.5	21
	30	29
	45	44
	60	62
	90	107
16"	11.25	14
	22.5	28
	45	58
	90	139
24"	11.25	20
	22.5	39
	45	81
	90	194

Tees, Reducer, Caps

Fitting Type	Size (inch)	Pipeline Restraint Req. (feet)
Tee	4	38
	6	52
	8	70
	10	88
	12	101
	16	131
	24	186
Reducer	6x4	30
	8x6	32
	10x4	74
	10x6	58
	10x8	31
	12x4	93
	12x6	78
	12x10	31
	16x4	128
	16x6	117
	16x8	101
	16x10	82
	16x12	59
	24x4	187
	24x6	180
	24x8	170
	24x10	160
	24x12	143
	24x16	106
Cap	4	41
	6	59
	8	76
	10	92
	12	107
	16	139
	24	194

NOTE:
AT PIPE INTERSECTIONS, MULTIPLE VALVES, RUN WIRE UP AT ONLY ONE VALVE.

PLACE TRACER WIRE BOX AT INTERVALS WHERE VALVES DO NOT OCCUR & PLACE TRACER WIRE IN BOX.

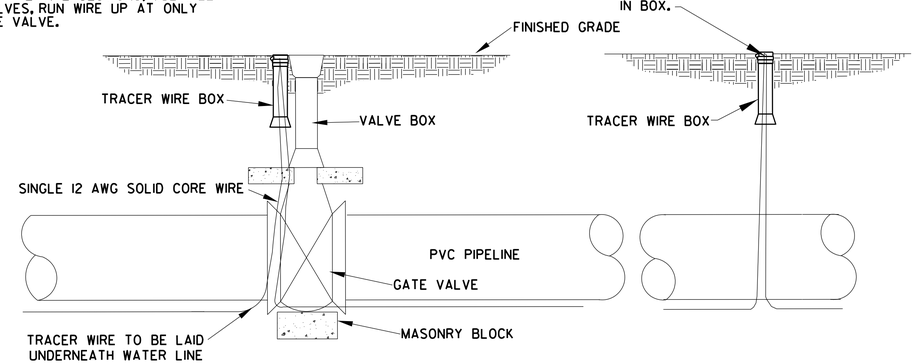

NOTES:
1. PLACE TRACER WIRE IN TRACER WIRE BOX AS SHOWN.
2. NO UNDERGROUND SPLICING WILL BE ALLOWED. DO NOT SPLICE WIRE WHEN BEGINNING A NEW SPOOL. INSTEAD INSTALL A TRACER WIRE BOX AND ATTACH EACH WIRE TO THE BOX.
3. TRACER WIRE BOXES SHALL BE PLACED NO FARTHER THAN 400' APART

TYPICAL TRACER WIRE INSTALLATION DETAIL

NOT TO SCALE

2/20/2025 10:20:08 AM
Design:Wkes280_utl_UC3.dgn

8/20/24

WILKES COUNTY

PROJECT REFERENCE NO.	SHEET NO.
BP11.R013	UC-4
DESIGNED BY: MUP	
DRAWN BY: BDW	
CHECKED BY: MUP	
APPROVED BY: MUP	
REVISED:	
NORTH CAROLINA DEPARTMENT OF TRANSPORTATION	
UTILITIES ENGINEERING SEC. PHONE:(919)707-6690 FAX:(919)250-4151	UTILITY CONSTRUCTION PLANS ONLY

NORTH CAROLINA PROFESSIONAL SEAL 20212 ENGINEER

Signed by: 4/10/2025 11:14 AM EDT

UTILITY CONSTRUCTION

DOCUMENT NOT CONSIDERED FINAL UNLESS ALL SIGNATURES COMPLETED

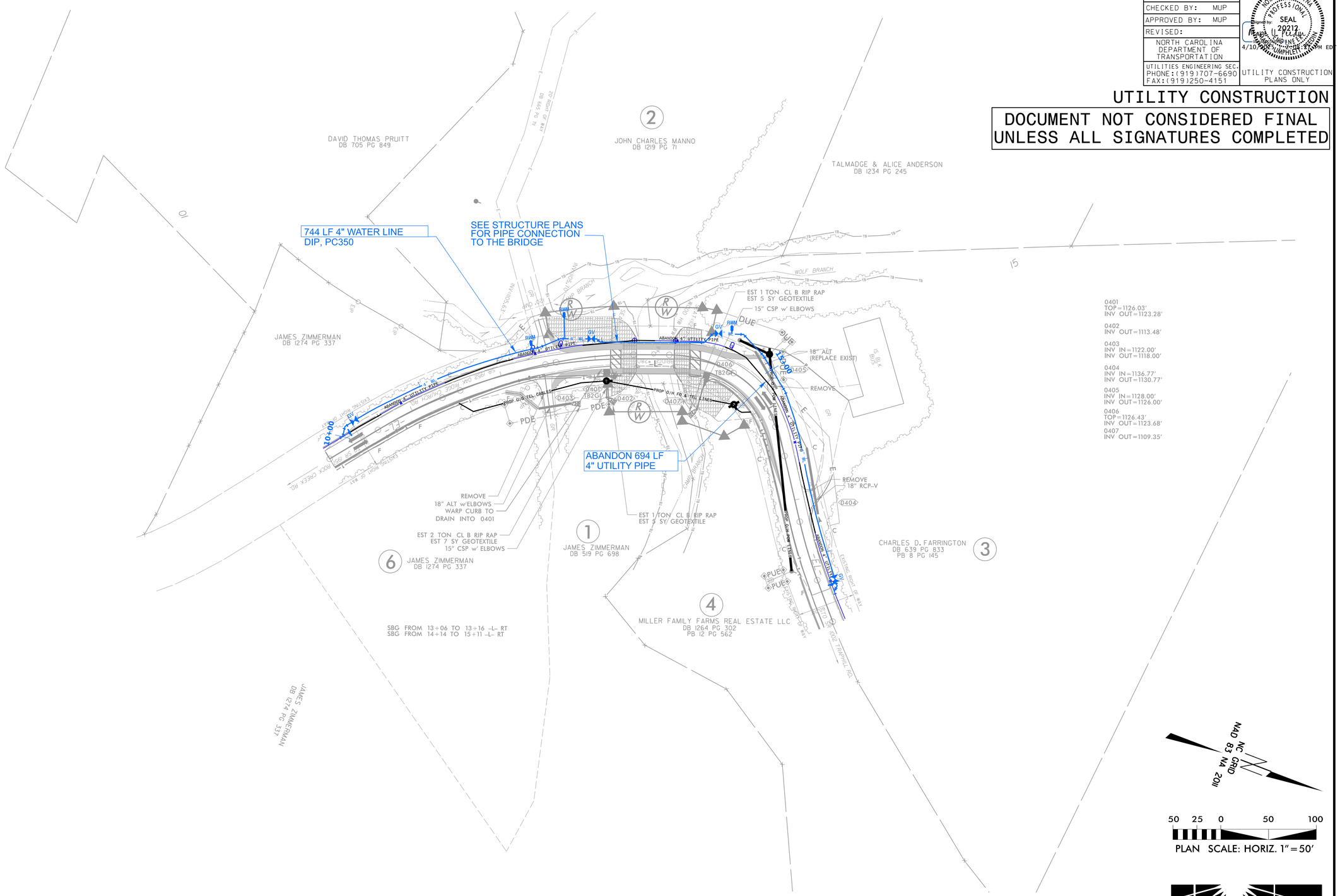

8/21/24

REVISIONS

THE ESTIMATED QUANTITY OF DUCTILE IRON WATER PIPE FITTINGS ON THIS PLAN SHEET IS 1,020 POUNDS. THE ACTUAL QUANTITY AND TYPE OF FITTINGS WILL VARY BASED ON FIELD CONDITIONS.

WILKES COUNTY

PROJECT REFERENCE NO.	SHEET NO.
BP11.R013	UC-4A
DESIGNED BY: MUP	
DRAWN BY: BDW	
CHECKED BY: MUP	
APPROVED BY: MUP	
REVISED:	
NORTH CAROLINA DEPARTMENT OF TRANSPORTATION	
UTILITIES ENGINEERING SEC. PHONE:(919)707-6690 FAX:(919)250-4151	UTILITY CONSTRUCTION PLANS ONLY

NORTH CAROLINA PROFESSIONAL SEAL 29212 ENGINEER
Signed by: Kevin U. Tolan
4/10/2025 12:25:00 PM EDT

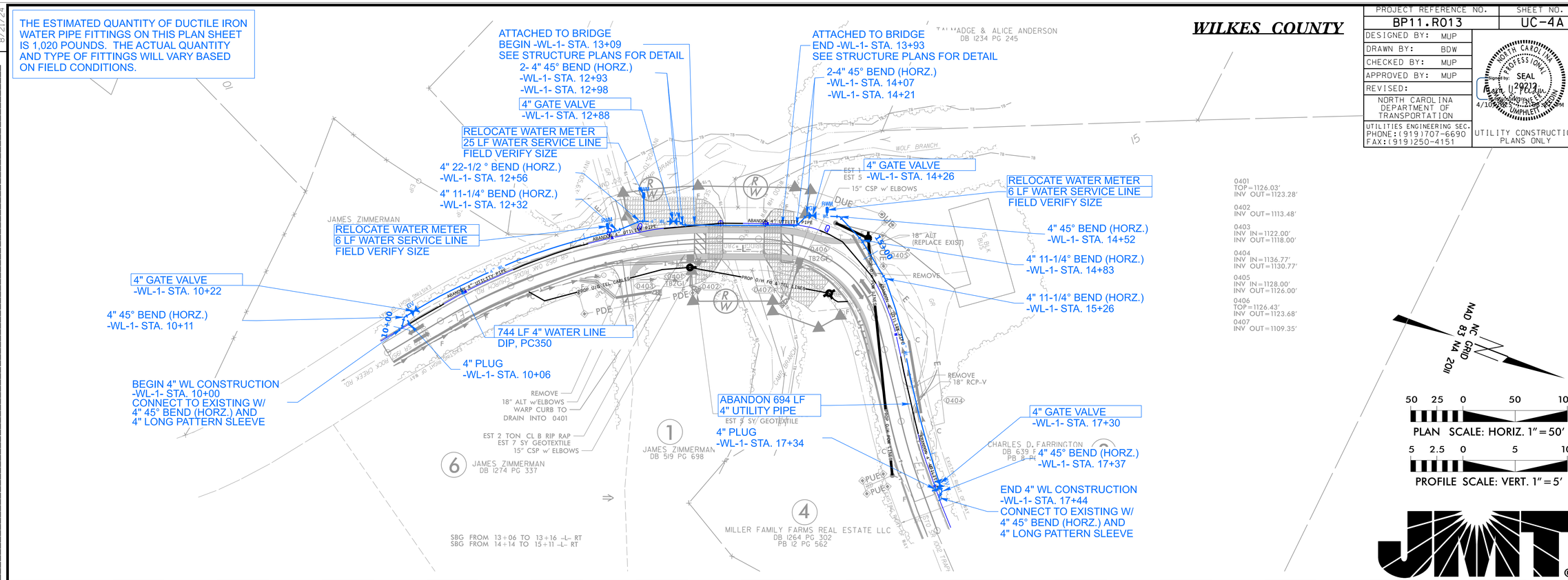

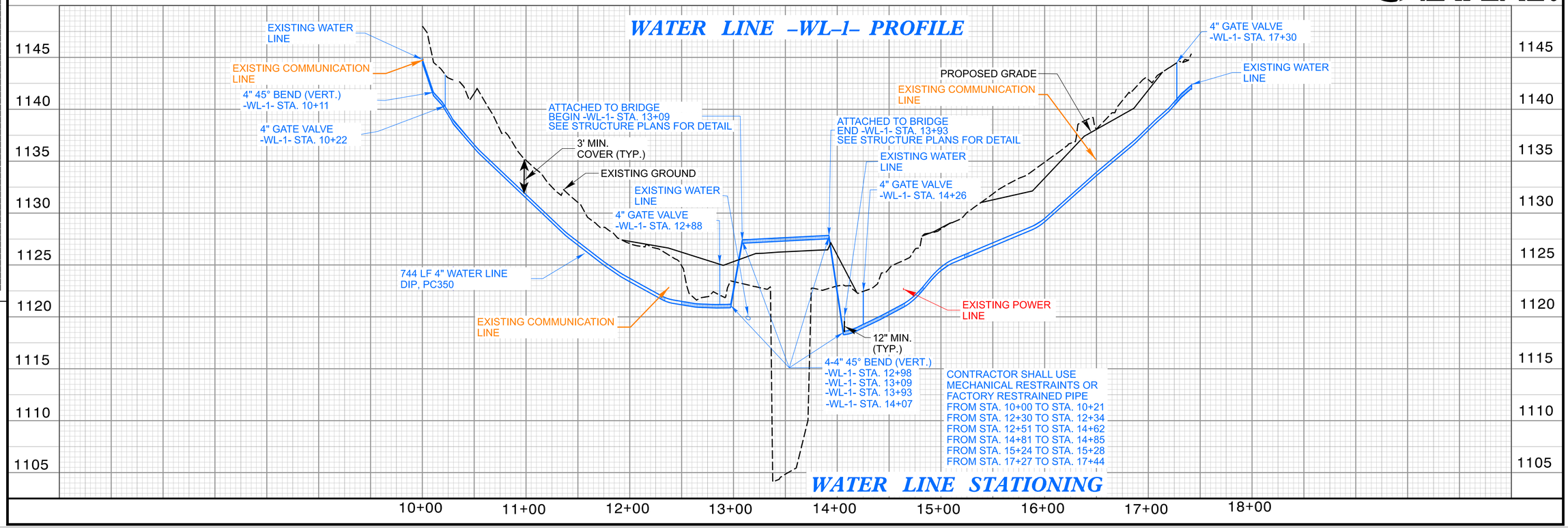

TIP PROJECT: BP.11.R013

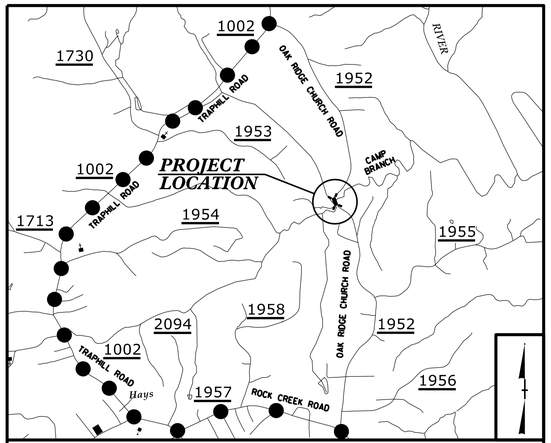

DETOUR

VICINITY MAP N.T.S

STATE OF NORTH CAROLINA
DIVISION OF HIGHWAYS

WILKES COUNTY

T.I.P. NO.	SHEET NO.
BP11.R013	UO–1

NOTE:
ALL UTILITY WORK SHOWN ON THIS SHEET WILL BE DONE BY OTHERS. NO PAYMENT WILL BE MADE TO THE CONTRACTOR FOR UTILITY WORK SHOWN ON THIS SHEET.

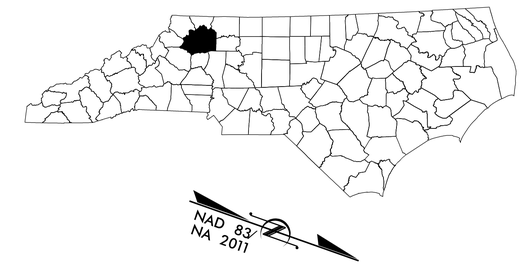

LOCATION: BRIDGE 960280 OVER CAMP BRANCH ON SR 1952 (OAK RIDGE CHURCH ROAD)
TYPE OF WORK: POWER AND COMMUNICATIONS

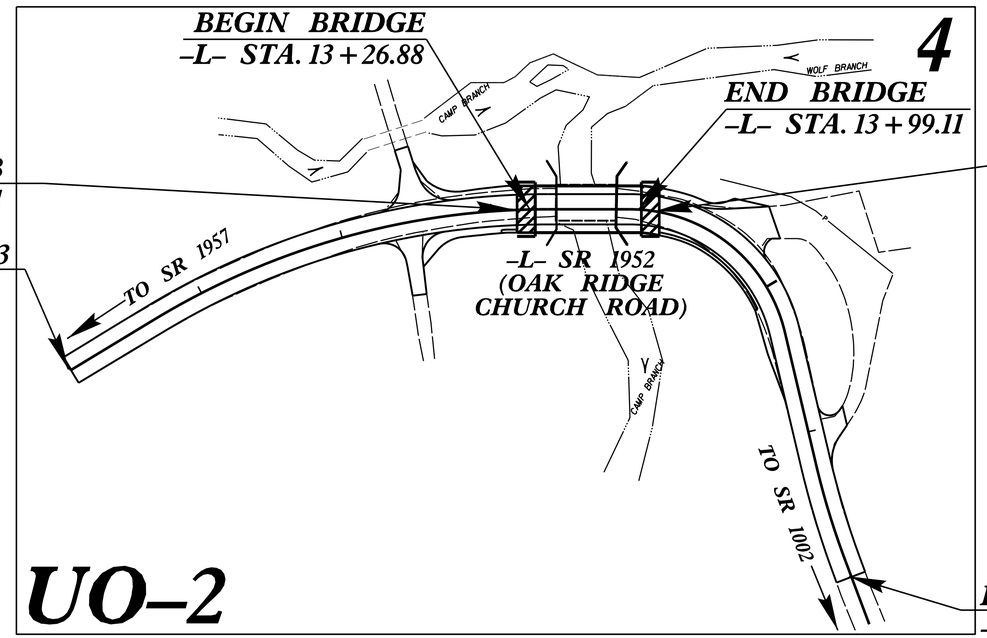

GRAPHIC SCALES

50 25 0 50 100
PLANS

50 25 0 50 100
PROFILE (HORIZONTAL)

10 5 0 10 20
PROFILE (VERTICAL)

INDEX OF SHEETS

SHEET NO.:	DESCRIPTION:
UO–1	TITLE SHEET
UO–2	UBO PLAN SHEET

UTILITY OWNERS WITH CONFLICTS

(A) POWER – DUKE ENERGY (DISTRIBUTION)
(B) COMMUNICATIONS – WILKES COMMUNICATIONS

SAM™
2641 SUMNER BOULEVARD
SUITE 116
RALEIGH, NC 27616
(919) 878–7466

TODD BUTNER — UTILITY PROJECT MANAGER
WILL PACE — PROJECT UTILITY COORDINATOR

DIVISION OF HIGHWAYS
DIVISION 11
801 STATESVILLE RD
NORTH WILKESBORO, 28659

BRANDON GREER — DIVISION UTILITY ENGINEER
–VACANT– — DIVISION UTILITY COORDINATOR

PROJECT REFERENCE NO.	SHEET NO.
BP11-R013	U0-2
THIS SHEET CORRESPONDS TO RDY-4	

UTILITIES BY OTHERS

ALL PROPOSED UTILITY WORK SHOWN ON THIS SHEET WILL BE DONE BY OTHERS. NO PAYMENT WILL BE MADE TO THE CONTRACTOR FOR PROPOSED UTILITY WORK SHOWN ON THIS SHEET.

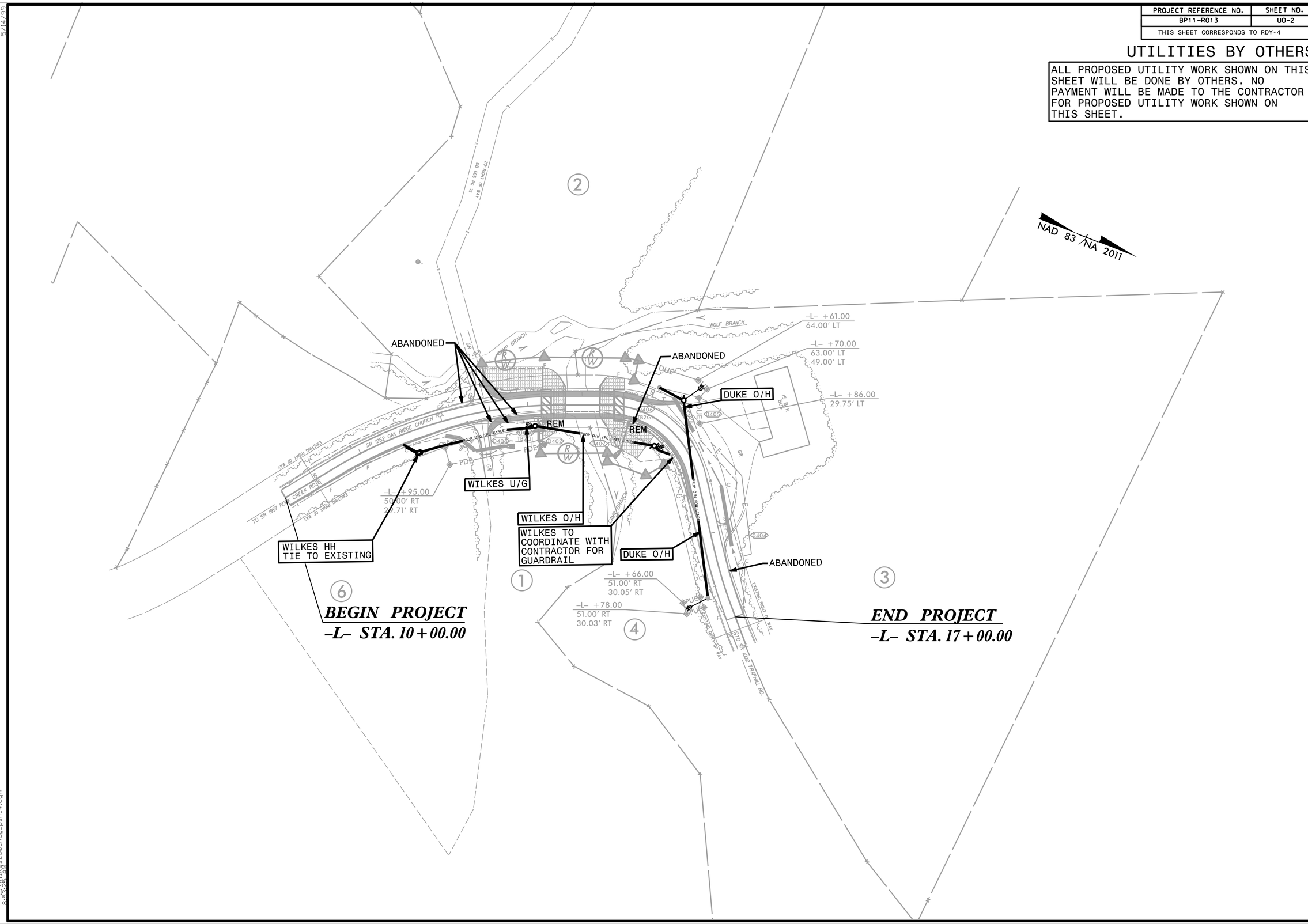

5/14/99

3/13/2025
R:\Roadway\Proj\bp11_r013_rdy_psh_4.dgn

STATE OF NORTH CAROLINA
DIVISION OF HIGHWAYS

PROJ. REFERENCE NO.	SHEET NO.
BP11.R013	X-1

Approximate quantities only. Unclassified excavation, borrow excavation, fine grading, clearing and grubbing, removal of existing pavement, and breaking of existing pavement will be paid for at the lump sum price for "Grading".

NOTE: EMBANKMENT COLUMN DOES NOT INCLUDE BACKFILL FOR UNDERCUT

CROSS-SECTION SUMMARY

Station L	Uncl. Exc. (cu. yd.)	Embt (cu. yd.)
10+00.00	0	0
10+50.00	17	1
11+00.00	38	1
11+50.00	46	0
12+00.00	29	8
12+44.12	3	67
12+50.00	0	14
13+00.00	5	256
13+26.88	5	225

Station L	Uncl. Exc. (cu. yd.)	Embt (cu. yd.)
13+99.11	0	0
14+00.00	0	6
14+50.00	9	255
14+70.00	2	79
15+00.00	4	69
15+50.00	101	4
16+00.00	136	0
16+50.00	77	1
17+00.00	36	1

RS&H 1520 SOUTH BOULEVARD, SUITE 200
CHARLOTTE, NC 28203
NC FIRM LICENSE No: F-0493

0 5 10

PROJ. REFERENCE NO.	SHEET NO.
BP11.R013	X-2

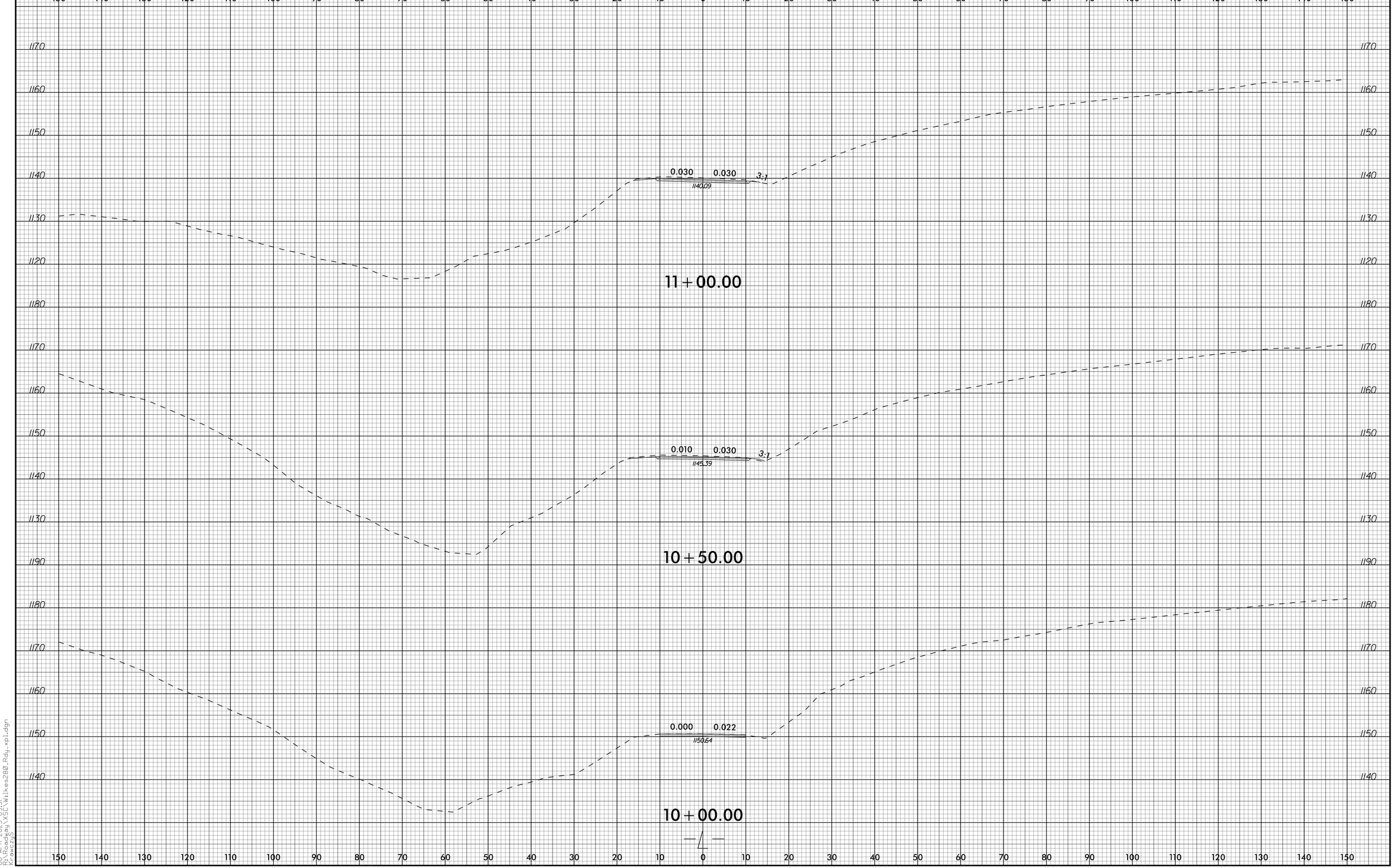

6/23/16

08-APR-2025 09:31
R:\Roadway\XSC\Wilkes280_Rdy_xpl.dgn
krawczyk

RS&H
1520 SOUTH BOULEVARD, SUITE 200
CHARLOTTE, NC 28203
NC FIRM LICENSE No: F-0493

0 5 10

PROJ. REFERENCE NO.	SHEET NO.
BP11.R013	X-3

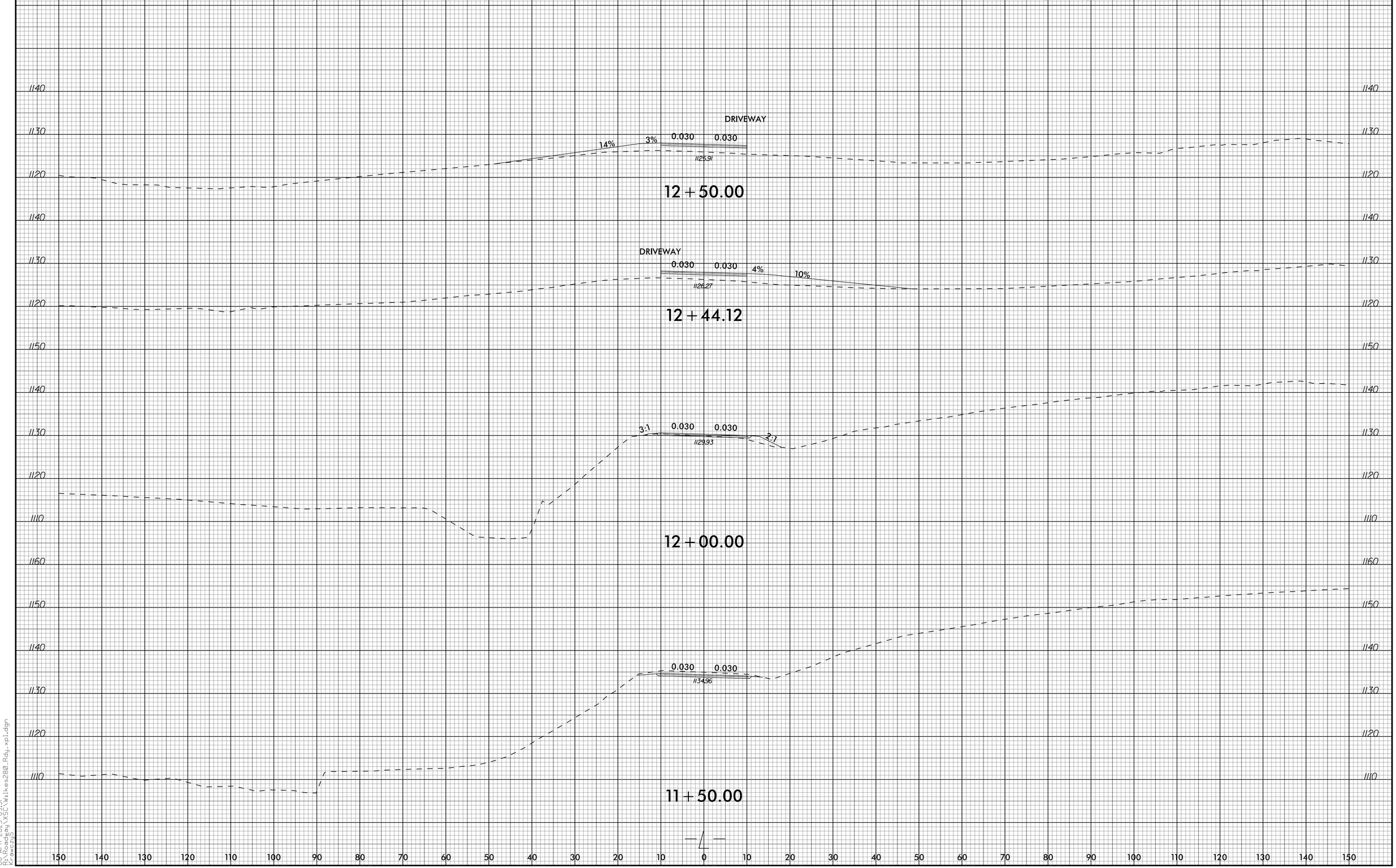

6/23/16
08-APR-2025 09:31
R:\Roadway\XSC\Wilkes280_Rdy_xpl.dgn
krawczys

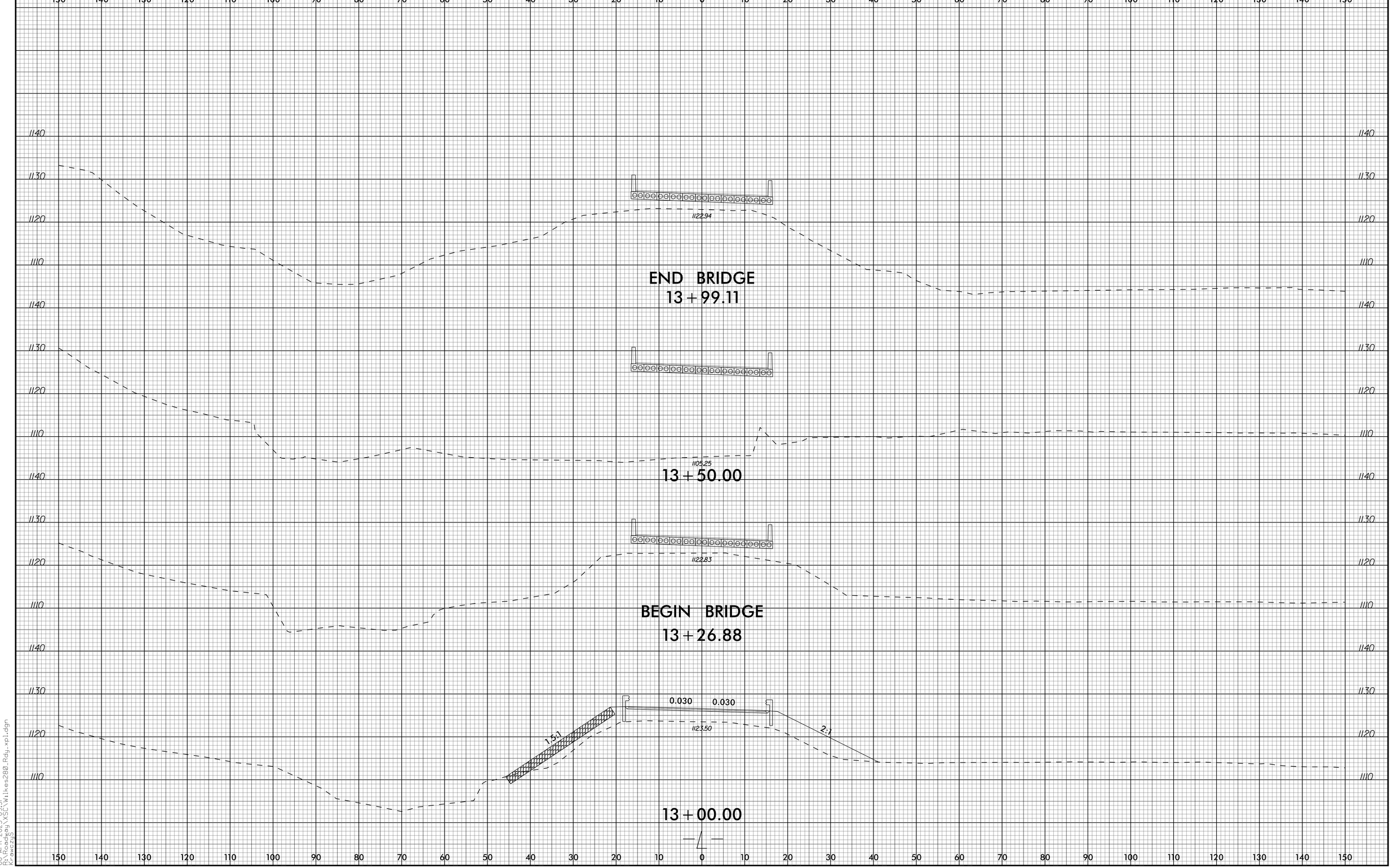

6/23/16

08-APR-2025 09:31
R:\Roadway\XSC\Wilkes280_Rdy_xpl.dgn
krowezJS

RS&H
1520 SOUTH BOULEVARD, SUITE 200
CHARLOTTE, NC 28203
NC FIRM LICENSE No: F-0493

0 5 10

PROJ. REFERENCE NO.	SHEET NO.
BP11.R013	X-5

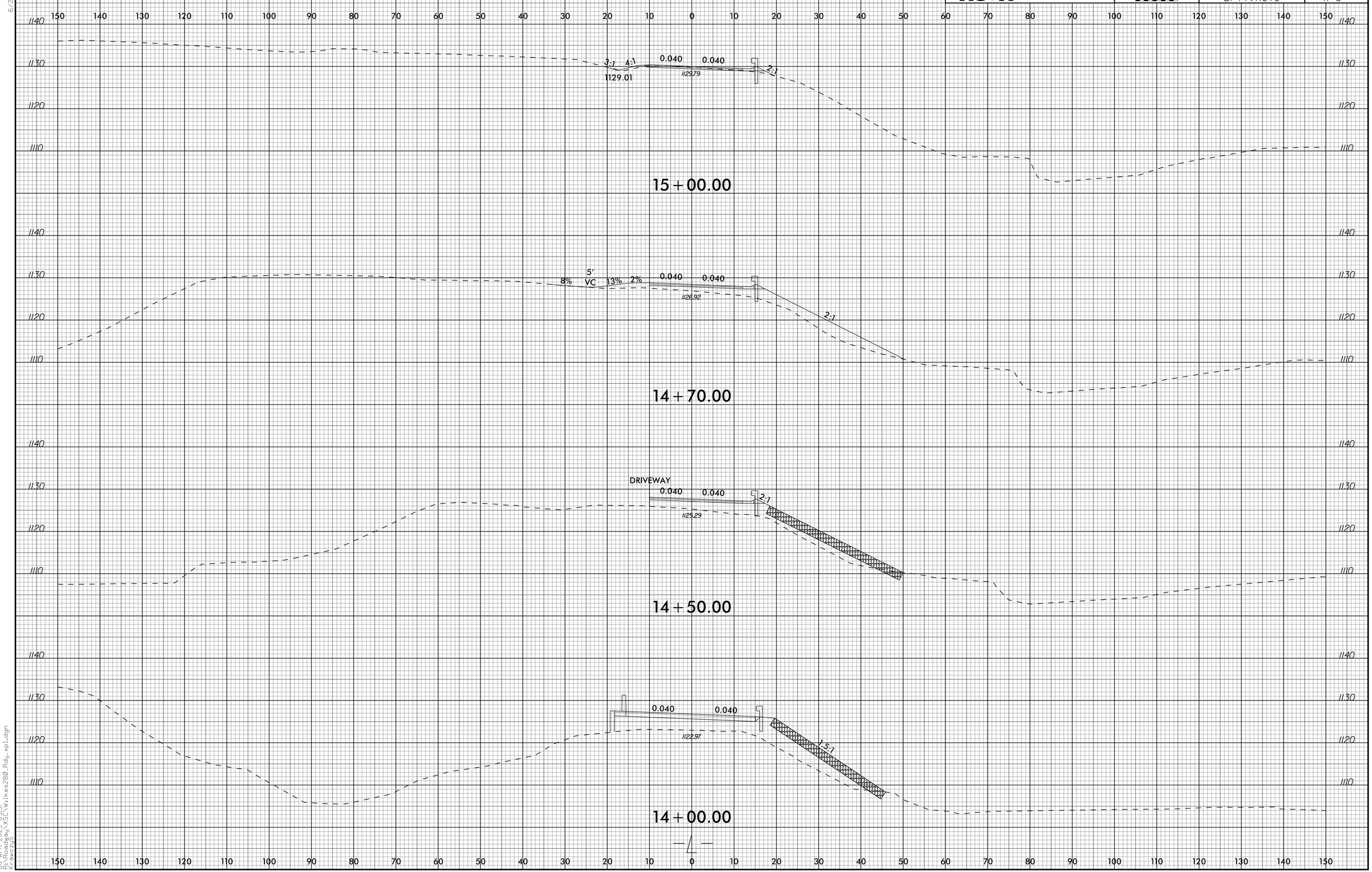

6/23/16
08-APR-2025 09:31
R:\Roadway\XSC\Wilkes280_Rdy_xpl.dgn
krowezJS

RS&H
1520 SOUTH BOULEVARD, SUITE 200
CHARLOTTE, NC 28203
NC FIRM LICENSE No: F-0493

0 5 10

PROJ. REFERENCE NO.	SHEET NO.
BP11.R013	X-6

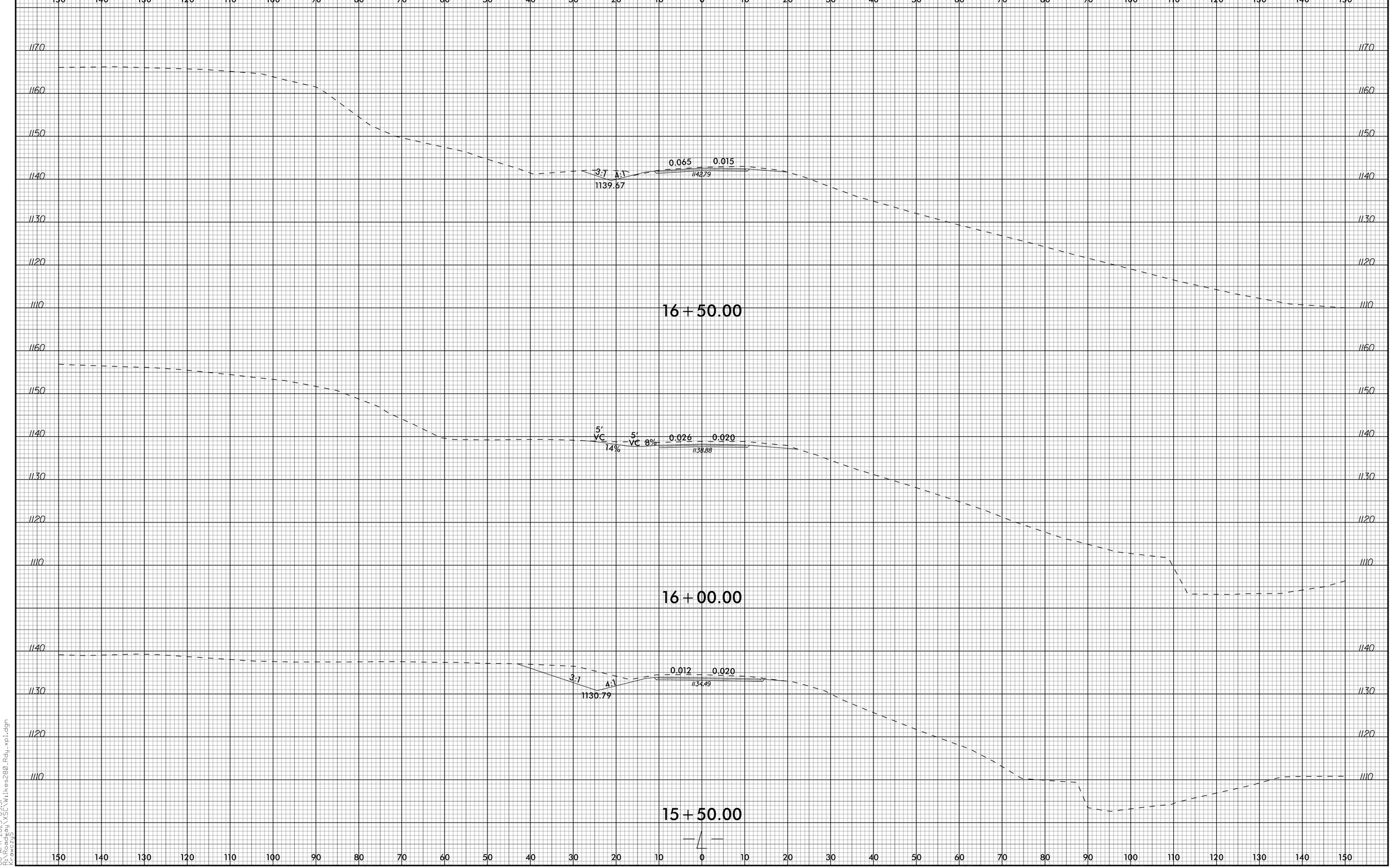

6/23/16

08-APR-2025 09:31
R:\Roadway\XSC\Wilkes280_Rdy_xpl.dgn
krowezJS

RS&H
1520 SOUTH BOULEVARD, SUITE 200
CHARLOTTE, NC 28203
NC FIRM LICENSE No: F-0493

0 5 10

PROJ. REFERENCE NO.	SHEET NO.
BP11.R013	X-7

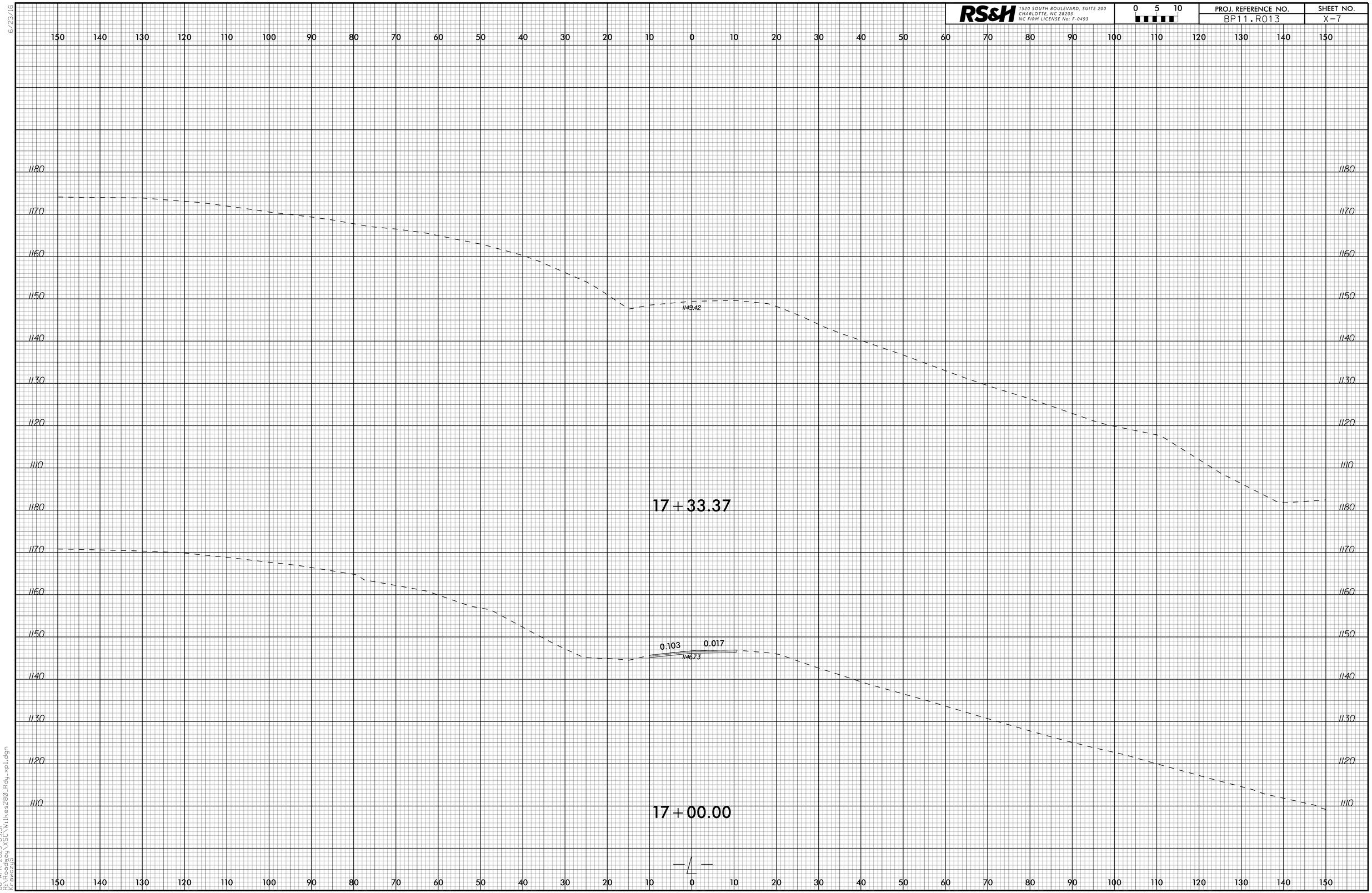

6/23/16

08-APR-2025 09:31
R:\Roadway\XSC\Wilkes280_Rdy_xp1.dgn
KPawczyk

09/08/99

WBS PROJECT: BP11.R013

CONTRACT: DK00427

STATE	STATE PROJECT REFERENCE NO.	SHEET NO.	TOTAL SHEETS
N.C.	BP11.R013	1	

STATE PROJ. NO.	F. A. PROJ. NO.	DESCRIPTION
BP11.R013.1	N/A	PE
BP11.R013.2	N/A	RW, UTIL.
BP11.R013.3	N/A	CONST.

STATE OF NORTH CAROLINA
DIVISION OF HIGHWAYS

WILKES COUNTY

LOCATION: REPLACEMENT OF BRIDGE 960280 OVER CAMP BRANCH ON SR 1952 (OAK RIDGE CHURCH ROAD)

TYPE OF WORK: GRADING, PAVING, DRAINAGE & STRUCTURE (BRIDGE)

100% PLANS

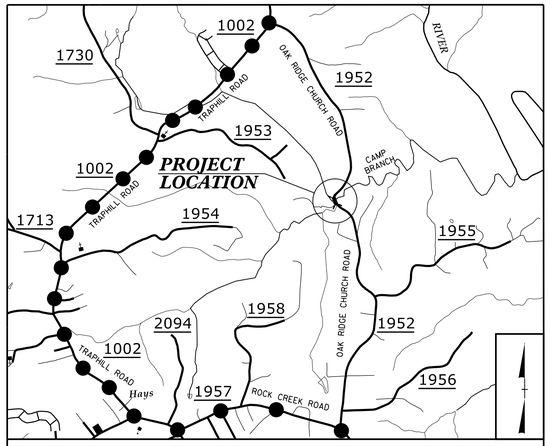

DETOUR

VICINITY MAP N.T.S

NAD 83/NA 2011

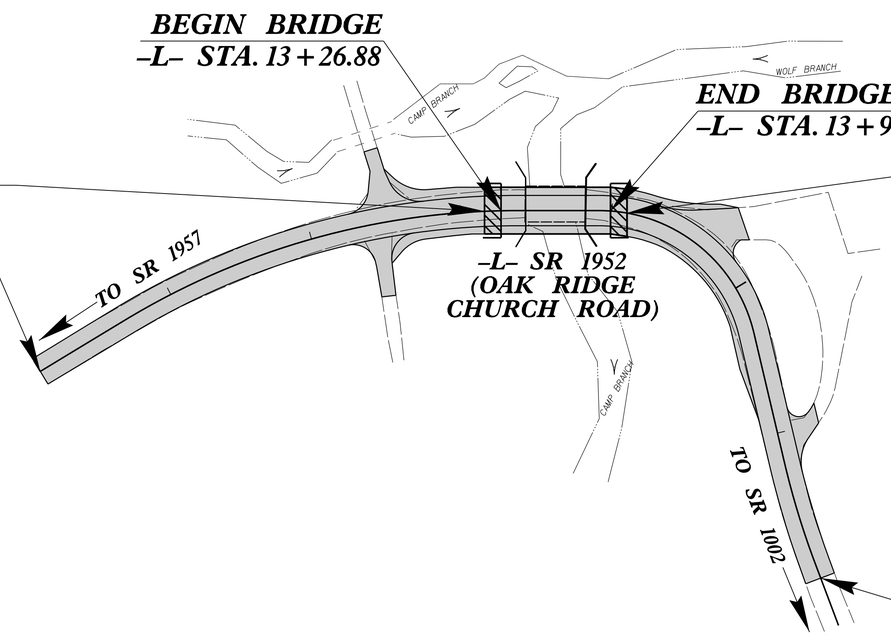

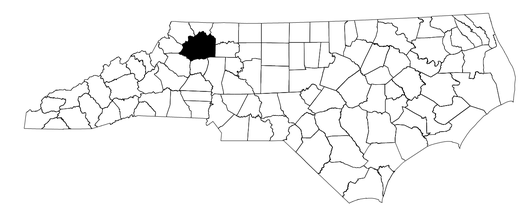

STRUCTURE

THERE IS NO CONTROL OF ACCESS ON THIS PROJECT.

DOCUMENT NOT CONSIDERED FINAL UNLESS ALL SIGNATURES COMPLETED

DESIGN DATA

ADT 2025 = 820
ADT 2045 = 1225

T = 6 %

V = 20 MPH

FUNC CLASS =
LOCAL
SUBREGIONAL TIER

PROJECT LENGTH

LENGTH ROADWAY WBS PROJECT BP11.R013	=	0.119 MILES
LENGTH STRUCTURE WBS PROJECT BP11.R013	=	0.014 MILES
TOTAL LENGTH WBS PROJECT BP11.R013	=	0.133 MILES

PREPARED IN THE OFFICE OF:

RS&H
1520 SOUTH BOULEVARD, SUITE 200
CHARLOTTE, NC 28203
NC FIRM LICENSE No: F-0493

FOR THE NORTH CAROLINA DEPARTMENT OF TRANSPORTATION

2024 STANDARD SPECIFICATIONS

RIGHT OF WAY DATE:
MAY 23, 2024

LETTING DATE:
MAY 9, 2025

BROOKE PARKER, PE
PROJECT ENGINEER

STEPHEN KRAWCZYK, EI
PROJECT DESIGN ENGINEER

ROB WEISZ, PE
NCDOT CONTACT

NORTH CAROLINA PROFESSIONAL SEAL 040017 ENGINEER TONY R. LANG JR. Signed by: 4/11/2025 2:09:22 PM EDT

4/11/2025
SIGNATURE: P.E.

STATE OF NORTH CAROLINA DEPARTMENT OF TRANSPORTATION

07-APR-2025 06:59
\\rsandh.com\files\Transportation\P\0034238018_Div 11 Wilkes 280\Design\Structures\CAD\401_000_BP11.R013_960280_TSH.dgn
khinb

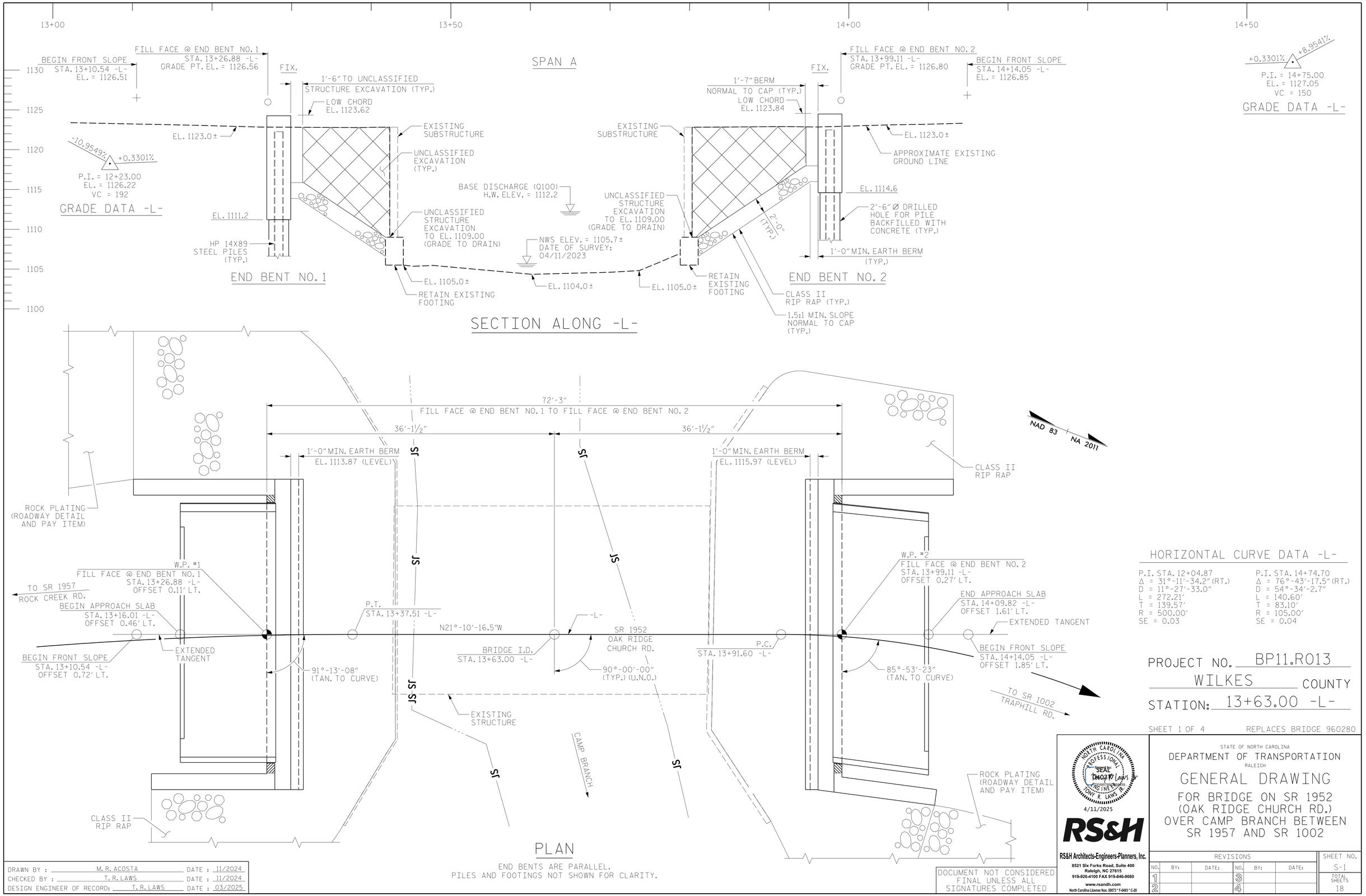

HORIZONTAL CURVE DATA -L-

P.I. STA. 12+04.87	P.I. STA. 14+74.70
Δ = 31°-11'-34.2" (RT.)	Δ = 76°-43'-17.5" (RT.)
D = 11°-27'-33.0"	D = 54°-34'-2.7"
L = 272.21'	L = 140.60'
T = 139.57'	T = 83.10'
R = 500.00'	R = 105.00'
SE = 0.03	SE = 0.04

PROJECT NO. BP11.R013

WILKES COUNTY

STATION: 13+63.00 -L-

SHEET 1 OF 4 REPLACES BRIDGE 960280

NORTH CAROLINA PROFESSIONAL "SEAL" 042247 Tony R. Laws Digitally signed by TONY R. LAWS 4/11/2025

RS&H

RS&H Architects-Engineers-Planners, Inc.
8521 Six Forks Road, Suite 400
Raleigh, NC 27615
919-926-4100 FAX 919-846-9080
www.rsandh.com
North Carolina License Nos. 50073 * F-0493 * C-28

STATE OF NORTH CAROLINA
DEPARTMENT OF TRANSPORTATION
RALEIGH

GENERAL DRAWING

FOR BRIDGE ON SR 1952
(OAK RIDGE CHURCH RD.)
OVER CAMP BRANCH BETWEEN
SR 1957 AND SR 1002

REVISIONS							SHEET NO.
NO.	BY:	DATE:	NO.	BY:	DATE:		S-1
1			3				TOTAL SHEETS
2			4				18

DRAWN BY : M. R. ACOSTA DATE : 11/2024
CHECKED BY : T. R. LAWS DATE : 11/2024
DESIGN ENGINEER OF RECORD: T. R. LAWS DATE : 03/2025

DOCUMENT NOT CONSIDERED FINAL UNLESS ALL SIGNATURES COMPLETED

4/7/2025
\\rsandh.com\files\Transportation\P\10034238018_Div 11 Wilkes 280\Design\Structures\CAD\401_001_BP11.R013_SMU_GD1_S-1_960280.dgn
ScaccaJ

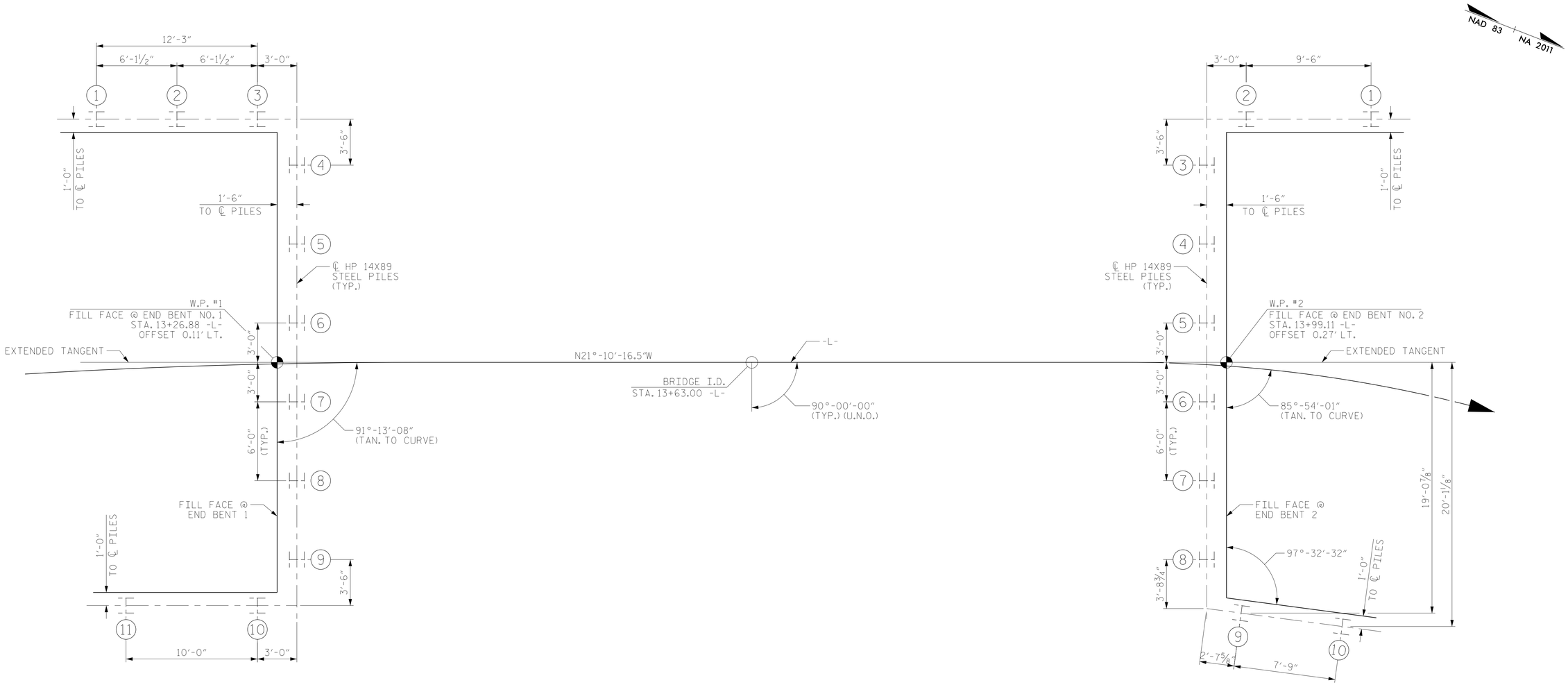

END BENT NO. 1

END BENT NO. 2

FOUNDATION LAYOUT

FOUNDATION NOTES

FOR PILES, SEE SECTION 450 OF THE STANDARD SPECIFICATIONS.

FILL HOLES FOR PILE EXCAVATION AT END BENT NO. 1 AND END BENT NO. 2 WITH CONCRETE.

INSTALL DRILLED-IN H-PILES AT END BENT NO. 1 AND END BENT NO. 2 WITH AT LEAST 10 FEET OF PENETRATION INTO HARD ROCK.

PROJECT NO. BP11.R013

WILKES COUNTY

STATION: 13+63.00 -L-

SHEET 2 OF 4

NORTH CAROLINA PROFESSIONAL SEAL ENGINEER TONY R. LAWS, JR. 040317 Signed by: DocuSign Envelope ID: 41571827-495F-426E-9410-3349107FD5BB

4/11/2025

RS&H

RS&H Architects-Engineers-Planners, Inc.
8521 Six Forks Road, Suite 400
Raleigh, NC 27615
919-926-4100 FAX 919-846-9080
www.rsandh.com
North Carolina License Nos. 50073 * F-0493 * C-28

STATE OF NORTH CAROLINA
DEPARTMENT OF TRANSPORTATION
RALEIGH

GENERAL DRAWING

FOR BRIDGE ON SR 1952 (OAK RIDGE CHURCH RD.) OVER CAMP BRANCH BETWEEN SR 1957 AND SR 1002

REVISIONS						SHEET NO.
NO.	BY:	DATE:	NO.	BY:	DATE:	S-2
1			3			TOTAL SHEETS
2			4			18

DOCUMENT NOT CONSIDERED FINAL UNLESS ALL SIGNATURES COMPLETED

DRAWN BY :	M. R. ACOSTA	DATE :	11/2024
CHECKED BY :	T. R. LAWS	DATE :	11/2024
DESIGN ENGINEER OF RECORD:	T. R. LAWS	DATE :	03/2025

4/7/2025
\\rsandh.com\files\Transportation\P\10034238018_Div 11 Wilkes 280\Design\Structures\CAD\401_003_BP11.R013_SMU_GD2_S-2_960280.dgn
Scaccad

SUMMARY OF PILE INFORMATION/INSTALLATION

(Blank entries indicate item is not applicable to structure)

End Bent / Bent No, Pile(s) #(-#) (e.g., "Bent 1, Piles 1-5")	Number of Piles per Line	Factored Resistance per Pile KIPS	Pile Cut-Off (Top of Pile) Elevation FT	Estimated Pile Length per Pile FT	Scour Critical Elevation FT	Driven Piles			Predrilling for Piles **			Drilled-In Piles		
						Minimum Pile Tip (Tip No Higher Than) Elevation FT	Required Driving Resistance (RDR)* per pile KIPS	Pile Redrives Quantity EACH	Predrilling Length per Pile LIN FT	Predrilling Elevation (Elevation Not To Predrill Below) FT	Maximum Predrilling Diameter INCHES	Pile Excavation (Bottom of Hole) Elevation FT	Pile Excavation Not In Soil per Pile LIN FT	Pile Excavation In Soil per Pile LIN FT
End Bent No. 1, Piles 4-7	4	230	See Substructure Plans	40			385					1088.60	10	11
End Bent No. 1, Piles 8-9	2	230	See Substructure Plans	30			385					1093.80	10	8
End Bent No. 1, Wing Piles 1-3	3	230	See Substructure Plans	40			385					1088.60	10	11
End Bent No. 1, Wing Piles 10-11	2	230	See Substructure Plans	30			385					1093.80	10	8
End Bent No. 2, Piles 3-8	6	230	See Substructure Plans	35			385					1092.00	10	13
End Bent No. 2, Wing Piles 1-2	2	230	See Substructure Plans	35			385					1092.00	10	13
End Bent No. 2, Wing Piles 9-10	2	230	See Substructure Plans	35			385					1092.00	10	13
TOTAL QUANTITY:													210	239

$$RDR \triangleq \frac{Factored\ Resistance + Factored\ Drag\ Load + Factored\ Dead\ Load}{Dynamic\ Resistance\ Factor} + Nominal\ Drag\ Load\ Resistance + Nominal\ Resistance\ from\ Scourable\ Material$$

** Predrilling for Piles is required for end bents/bents with a predrilling length and at the Contractor's option for end bents/bents with predrilling information but no predrilling length.

PILE DESIGN INFORMATION

(Blank entries indicate item is not applicable to structure)

End Bent / Bent No, Pile(s) #(-#) (e.g., "Bent 1, Piles 1-5")	Factored Axial Load per Pile KIPS	Factored Drag Load per Pile KIPS	Factored Dead Load * per Pile KIPS	Dynamic Resistance Factor	Nominal Drag Resistance per Pile KIPS	Nominal Scour Resistance per Pile KIPS
End Bent No. 1, Piles 4-9	230			0.60		
End Bent No. 2, Piles 3-8	230			0.60		

* Factored Dead Load is factored weight of pile above the ground line.

PROJECT NO. BP11.R013

WILKES COUNTY

STATION: 13+63.00 -L-

SHEET 3 OF 4

NOTES:

1. The Pile Foundation Tables are based on the bridge substructure design and foundation recommendations sealed by a North Carolina Professional Engineer (Thomas J. Daily, PE, #045672) on 03-06-2025.
2. Total Pile Driving Equipment Setup quantity (not shown in Pile Foundation Tables) equals the number of driven piles, i.e., the number of piles with a Required Driving Resistance.
3. The Engineer may adjust the quantity for DPT Testing and Pipe Pile Plates when necessary.

NORTH CAROLINA PROFESSIONAL SEAL 040317 ENGINEER TONY R. LAWS JR.

Tony R. Laws Jr.

4/11/2025

RS&H

RS&H Architects-Engineers-Planners, Inc.
8521 Six Forks Road, Suite 400
Raleigh, NC 27615
919-926-4100 FAX 919-846-9080
www.rsandh.com
North Carolina License Nos. 50073 * F-0493 * C-28

STATE OF NORTH CAROLINA
DEPARTMENT OF TRANSPORTATION
RALEIGH

PILE FOUNDATION TABLE

REVISIONS						SHEET NO.
NO.	BY:	DATE:	NO.	BY:	DATE:	S-3
1			3			TOTAL SHEETS
2			4			18

DOCUMENT NOT CONSIDERED FINAL UNLESS ALL SIGNATURES COMPLETED

DRAWN BY :	M. R. ACOSTA	DATE :	11/2024
CHECKED BY :	T. R. LAWS	DATE :	11/2024
DESIGN ENGINEER OF RECORD:	T. R. LAWS	DATE :	11/2024

3/13/2025
\\rsandh.com\files\Transportation\P\10034238018_Div 11 Wilkes 280\Design\Structures\CAD\401_005_BP11.R013_SMU_FDT_S-3_960280.dgn
KhinB

BM#1: RAILROAD SPIKE IN ROOT OF 24" POPLAR TREE, 87' RT. OF STA. 12+91 -L-, EL. 1115.62

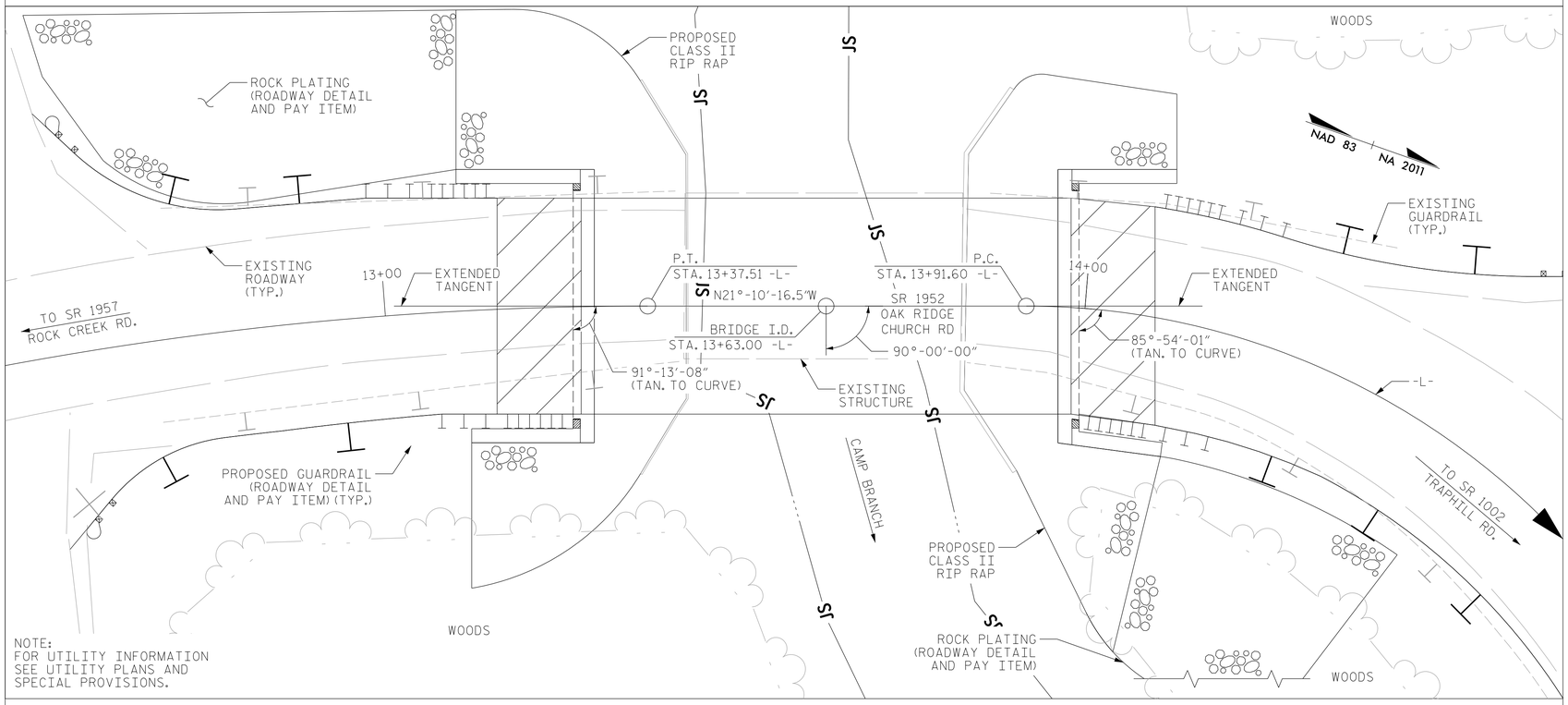

NOTE:
FOR UTILITY INFORMATION SEE UTILITY PLANS AND SPECIAL PROVISIONS.

LOCATION SKETCH

NOTES

ASSUMED LIVE LOAD = HL 93 OR ALTERNATE LOADING.

THIS BRIDGE HAS BEEN DESIGNED IN ACCORDANCE WITH THE REQUIREMENTS OF THE AASHTO LRFD BRIDGE DESIGN SPECIFICATIONS.

THIS BRIDGE IS LOCATED IN SEISMIC ZONE 1.

THIS STRUCTURE HAS BEEN DESIGNED IN ACCORDANCE WITH "HEC 18 - EVALUATING SCOUR AT BRIDGES".

THE MATERIAL SHOWN IN THE CROSS-HATCHED AREA ON SHEET S-1 SHALL BE EXCAVATED A DISTANCE OF 22'-0"± TO THE LEFT AND 13'-0" TO THE RIGHT OF THE CENTERLINE ROADWAY AS DIRECTED BY THE ENGINEER. THIS WORK WILL BE PAID FOR AT THE CONTRACT LUMP SUM PRICE FOR UNCLASSIFIED STRUCTURE EXCAVATION. SEE SECTION 412 OF THE STANDARD SPECIFICATIONS.

THE EXISTING STRUCTURE CONSISTING OF A SINGLE SPAN, 39'-0", 23'-9" CLEAR ROADWAY WIDTH, ON PRESTRESSED CONCRETE GIRDERS AND LOCATED AT THE PROPOSED STRUCTURE SHALL BE REMOVED. THE EXISTING STRUCTURE IS PRESENTLY NOT POSTED FOR LOAD LIMIT. SHOULD THE STRUCTURAL INTEGRITY OF THE STRUCTURE DETERIORATE DURING CONSTRUCTION OF THE PROPOSED BRIDGE, A LOAD LIMIT MAY BE POSTED AND MAY BE REDUCED AS FOUND NECESSARY DURING THE LIFE OF THE PROJECT. PAYMENT FOR THE REMOVAL OF EXISTING STRUCTURE SHALL BE INCLUDED IN THE LUMP SUM PRICE BID FOR UNCLASSIFIED STRUCTURE EXCAVATION.

THE EXISTING STRUCTURE INDICATED ON THE PLANS IS FROM THE BEST INFORMATION AVAILABLE. SINCE THIS INFORMATION IS SHOWN FOR THE CONVENIENCE OF THE CONTRACTOR, THE CONTRACTOR SHALL HAVE NO CLAIM WHATSOEVER AGAINST THE DEPARTMENT OF TRANSPORTATION FOR ANY DELAYS OR ADDITIONAL COST INCURRED BASED ON DIFFERENCES BETWEEN THE EXISTING STRUCTURE SHOWN ON THE PLANS AND THE ACTUAL CONDITIONS AT THE PROJECT SITE.

REMOVAL OF THE EXISTING STRUCTURE SHALL BE PERFORMED IN A MANNER THAT PREVENTS DEBRIS FROM FALLING INTO THE WATER. THE CONTRACTOR SHALL SUBMIT DEMOLITION PLANS FOR REVIEW AND REMOVE THE STRUCTURE IN ACCORDANCE WITH ARTICLE 402-2 OF THE STANDARD SPECIFICATIONS.

ASPHALT WEARING SURFACE IS INCLUDED IN THE ROADWAY QUANTITY ON ROADWAY PLANS.

FOR EROSION CONTROL MEASURES, SEE EROSION CONTROL PLANS.

FOR FALSEWORK AND FORMWORK, SEE SPECIAL PROVISIONS.

FOR SUBMITTAL OF WORKING DRAWINGS, SEE SPECIAL PROVISIONS.

FOR CRANE SAFETY, SEE SPECIAL PROVISIONS.

FOR GROUT FOR STRUCTURES, SEE SPECIAL PROVISIONS.

FOR ASBESTOS ASSESSMENT, SEE SPECIAL PROVISIONS.

FOR OTHER DESIGN DATA AND GENERAL NOTES, SEE SHEET SN.

HYDRAULIC DATA

DESIGN DISCHARGE	= 1200 CFS
FREQUENCY OF DESIGN FLOOD	= 25 YRS
DESIGN HIGH WATER ELEVATION	= 1110.9'
DRAINAGE AREA	= 4.0 SQ. MI.
BASE DISCHARGE (Q100)	= 1800 CFS
BASE HIGH WATER ELEVATION	= 1112.2'

OVERTOPPING FLOOD DATA

OVERTOPPING DISCHARGE	= 10000 CFS
FREQUENCY OF OVERTOPPING FLOOD	= 500+ YRS
* OVERTOPPING FLOOD ELEVATION	= 1126.5'

* OVERTOPPING @ STA. 13+13.00 -L-

TOTAL BILL OF MATERIALS

	REMOVAL OF EXISTING STRUCTURE @ STA. 13+63.00 -L-	ASBESTOS ASSESSMENT	PILE EXCAVATION IN SOIL	PILE EXCAVATION NOT IN SOIL	UNCLASSIFIED STRUCTURE EXCAVATION @ STA. 13+63.00 -L-	CLASS A CONCRETE	BRIDGE APPROACH SLABS	REINFORCING STEEL	PILE DRIVING EQUIPMENT SETUP FOR HP 14X89 STEEL PILES	HP 14X89 STEEL PILES		VERTICAL CONCRETE BARRIER RAIL	RIP RAP CLASS II	GEOTEXTILE FOR DRAINAGE
	LUMP SUM	LUMP SUM	LIN. FT.	LIN. FT.	LUMP SUM	CU. YDS.	LUMP SUM	LBS.	EACH	NO.	LIN. FT.	LIN. FT.	TONS	SQ. YDS.
SUPERSTRUCTURE												164.25		
END BENT NO. 1			109	110		132.5		8,388	11	11	400		295	325
END BENT NO. 2			130	100		109.3		6,200	10	10	350		235	260
TOTAL	LUMP SUM	LUMP SUM	239	210	LUMP SUM	241.8	LUMP SUM	14,588	21	21	750	164.25	530	585

	ELASTOMERIC BEARINGS	3'-0" X 2'-0" PRESTRESSED CONCRETE CORED SLABS	
	LUMP SUM	NO.	LIN. FT.
SUPERSTRUCTURE		11	770
END BENT NO. 1			
END BENT NO. 2			
TOTAL	LUMP SUM	11	770

PROJECT NO. BP11.R013
WILKES COUNTY
STATION: 13+63.00 -L-

SHEET 4 OF 4

DRAWN BY : M. R. ACOSTA DATE : 11/2024
CHECKED BY : T. R. LAWS DATE : 11/2024
DESIGN ENGINEER OF RECORD: T. R. LAWS DATE : 03/2025

DOCUMENT NOT CONSIDERED FINAL UNLESS ALL SIGNATURES COMPLETED

NORTH CAROLINA PROFESSIONAL SEAL 040217 ENGINEER TONY R. LAWS
4/11/2025

RS&H

RS&H Architects-Engineers-Planners, Inc.
8521 Six Forks Road, Suite 400
Raleigh, NC 27615
919-926-4100 FAX 919-846-9080
www.rsandh.com
North Carolina License Nos. 50073 * F-0493 * C-28

STATE OF NORTH CAROLINA
DEPARTMENT OF TRANSPORTATION
RALEIGH

GENERAL DRAWING
FOR BRIDGE ON SR 1952 (OAK RIDGE CHURCH RD.) OVER CAMP BRANCH BETWEEN SR 1957 AND SR 1002

REVISIONS								SHEET NO.
NO.	BY:	DATE:	NO.	BY:	DATE:			S-4
1			3					TOTAL SHEETS
2			4					18

4/7/2025
\\rsandh.com\files\Transportation\P\10034238018_Div 11 Wilkes 280\Design\Structures\CAD\401_007_BP11.R013_SMU_GD3_S-4_960280.dgn
ScaccaJ

LOAD AND RESISTANCE FACTOR RATING (LRFD) SUMMARY FOR PRESTRESSED CONCRETE GIRDERS

LEVEL		VEHICLE	WEIGHT (W) (TONS)	CONTROLLING LOAD RATING	MINIMUM RATING FACTORS (RF)	TONS = W X RF	STRENGTH I LIMIT STATE											SERVICE III LIMIT STATE						COMMENT NUMBER
								MOMENT					SHEAR						MOMENT					
							LIVELOAD FACTORS	DISTRIBUTION FACTORS (DF)	RATING FACTOR	SPAN	GIRDER LOCATION	DISTANCE FROM LEFT END OF SPAN (ft)	DISTRIBUTION FACTORS (DF)	RATING FACTOR	SPAN	GIRDER LOCATION	DISTANCE FROM LEFT END OF SPAN (ft)	LIVELOAD FACTORS	DISTRIBUTION FACTORS (DF)	RATING FACTOR	SPAN	GIRDER LOCATION	DISTANCE FROM LEFT END OF SPAN (ft)	
DESIGN LOAD RATING		HL-93(Inv)	N/A	1	1.01	--	1.75	0.28	1.03	70'	EL	34.50	0.51	1.32	70'	EL	6.90	0.80	0.27	1.01	70'	EL	34.50	
		HL-93(Opr)	N/A	--	1.34	--	1.35	0.28	1.34	70'	EL	34.50	0.51	1.72	70'	EL	6.90	N/A	--	--	--	--	--	
		HS-20(Inv)	36.000	2	1.31	47.02	1.75	0.28	1.34	70'	EL	34.50	0.51	1.65	70'	EL	6.90	0.80	0.27	1.31	70'	EL	34.50	
		HS-20(Opr)	36.000	--	1.74	62.64	1.35	0.28	1.74	70'	EL	34.50	0.51	2.14	70'	EL	6.90	N/A	--	--	--	--	--	
LEGAL LOAD RATING	SV	SNSH	13.500	--	2.92	39.38	1.4	0.28	3.75	70'	EL	34.50	0.51	4.87	70'	EL	6.90	0.80	0.27	2.92	70'	EL	34.50	
		SNGARBS2	20.000	--	2.19	43.74	1.4	0.28	2.81	70'	EL	34.50	0.51	3.47	70'	EL	6.90	0.80	0.27	2.19	70'	EL	34.50	
		SNAGRIS2	22.000	--	2.08	45.69	1.4	0.28	2.67	70'	EL	34.50	0.51	3.23	70'	EL	6.90	0.80	0.27	2.08	70'	EL	34.50	
		SNCOTTS3	27.250	--	1.45	39.57	1.4	0.28	1.87	70'	EL	34.50	0.51	2.43	70'	EL	6.90	0.80	0.27	1.45	70'	EL	34.50	
		SNAGGRS4	34.925	--	1.22	42.55	1.4	0.28	1.57	70'	EL	34.50	0.51	2.03	70'	EL	6.90	0.80	0.27	1.22	70'	EL	34.50	
		SNS5A	35.550	--	1.19	42.35	1.4	0.28	1.53	70'	EL	34.50	0.51	2.06	70'	EL	6.90	0.80	0.27	1.19	70'	EL	34.50	
		SNS6A	39.950	--	1.10	43.75	1.4	0.28	1.41	70'	EL	34.50	0.51	1.88	70'	EL	6.90	0.80	0.27	1.10	70'	EL	34.50	
		SNS7B	42.000	--	1.04	43.80	1.4	0.28	1.34	70'	EL	34.50	0.51	1.85	70'	EL	6.90	0.80	0.27	1.04	70'	EL	34.50	
	TTST	TNAGRIT3	33.000	--	1.34	44.09	1.4	0.28	1.72	70'	EL	34.50	0.51	2.23	70'	EL	6.90	0.80	0.27	1.34	70'	EL	34.50	
		TNT4A	33.075	--	1.34	44.40	1.4	0.28	1.72	70'	EL	34.50	0.51	2.17	70'	EL	6.90	0.80	0.27	1.34	70'	EL	34.50	
		TNT6A	41.600	--	1.10	45.75	1.4	0.28	1.41	70'	EL	34.50	0.51	1.98	70'	EL	6.90	0.80	0.27	1.10	70'	EL	34.50	
		TNT7A	42.000	--	1.11	46.46	1.4	0.28	1.42	70'	EL	34.50	0.51	1.94	70'	EL	6.90	0.80	0.27	1.11	70'	EL	34.50	
		TNT7B	42.000	--	1.15	48.18	1.4	0.28	1.47	70'	EL	34.50	0.51	1.80	70'	EL	6.90	0.80	0.27	1.15	70'	EL	34.50	
		TNAGRIT4	43.000	--	1.09	46.84	1.4	0.28	1.40	70'	EL	34.50	0.51	1.74	70'	EL	6.90	0.80	0.27	1.09	70'	EL	34.50	
		TNAGT5A	45.000	--	1.03	46.18	1.4	0.28	1.32	70'	EL	34.50	0.51	1.74	70'	EL	6.90	0.80	0.27	1.03	70'	EL	34.50	
		TNAGT5B	45.000	3	1.01	45.58	1.4	0.28	1.30	70'	EL	34.50	0.51	1.66	70'	EL	6.90	0.80	0.27	1.01	70'	EL	34.50	
EMERGENCY VEHICLE (EV)		EV2	28.750	--	1.82	52.21	1.3	0.28	2.11	70'	EL	34.50	0.51	2.59	70'	EL	6.90	0.80	0.27	1.82	70'	EL	34.50	
		EV3	43.000	4	1.19	51.07	1.3	0.28	1.38	70'	EL	34.50	0.51	1.75	70'	EL	6.90	0.80	0.27	1.19	70'	EL	34.50	

LOAD FACTORS:

DESIGN LOAD RATING FACTORS	LIMIT STATE	γ_{DC}	γ_{DW}
	STRENGTH I	1.25	1.50
	SERVICE III	1.00	1.00

NOTES:

MINIMUM RATING FACTORS ARE BASED ON THE STRENGTH I AND SERVICE III LIMIT STATES.

ALLOWABLE STRESSES FOR SERVICE III LIMIT STATE ARE AS REQUIRED FOR DESIGN.

COMMENTS:

1.
2.
3.
4.

CONTROLLING LOAD RATING

1 DESIGN LOAD RATING (HL-93)
2 DESIGN LOAD RATING (HS-20)
3 LEGAL LOAD RATING **
4 EMERGENCY VEHICLE LOAD RATING **
** SEE CHART FOR VEHICLE TYPE

GIRDER LOCATION

I - INTERIOR GIRDER
EL - EXTERIOR LEFT GIRDER
ER - EXTERIOR RIGHT GIRDER

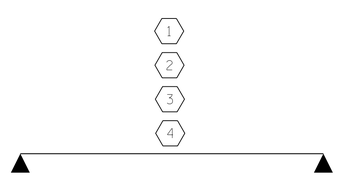

LRFR SUMMARY

FOR SPAN 'A'

PROJECT NO. BP11.R013

WILKES COUNTY

STATION: 13+63.00 -L-

ASSEMBLED BY : M. ACOSTA	DATE : 11/2024
CHECKED BY : T. LAWS	DATE : 11/2024
DRAWN BY : CVC 6/10	REV. BY : BNB/AKP 06/23
CHECKED BY : DNS 6/10	

DOCUMENT NOT CONSIDERED FINAL UNLESS ALL SIGNATURES COMPLETED

NORTH CAROLINA PROFESSIONAL SEAL 049217 ENGINEER TONY E. LAWS JR. 4/11/2025

RS&H

RS&H Architects-Engineers-Planners, Inc.
8521 Six Forks Road, Suite 400
Raleigh, NC 27615
919-926-4100 FAX 919-846-9080
www.rsandh.com
North Carolina License Nos. 50073 * F-0493 * C-28

STATE OF NORTH CAROLINA
DEPARTMENT OF TRANSPORTATION
RALEIGH

STANDARD
LRFR SUMMARY FOR 70' CORED SLAB UNIT 90° SKEW
(NON-INTERSTATE TRAFFIC)

REVISIONS						SHEET NO.
NO.	BY:	DATE:	NO.	BY:	DATE:	S-5
1			3			TOTAL SHEETS
2			4			18

4/7/2025
\\rsandh.com\files\Transportation\P\10034238018_Div 11 Wilkes 280\Design\Structures\CAD\401_009_BP11.R013_SMU_LRFR_S-5_960280.dgn
ScaccaJ

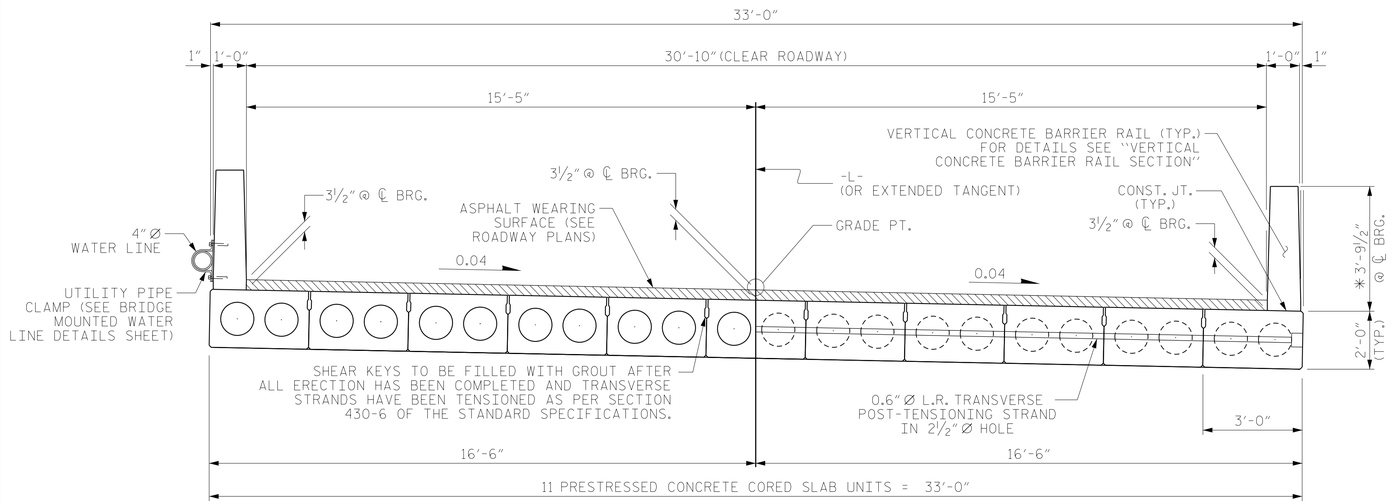

HALF SECTION THROUGH VOIDS

TYPICAL SECTION

HALF SECTION AT INTERMEDIATE DIAPHRAGMS

✳ - THE MAXIMUM BARRIER RAIL HEIGHT AND ASPHALT THICKNESS IS SHOWN. THE HEIGHT OF THE BARRIER RAIL AND ASPHALT THICKNESS VARIES WHILE THE TOP OF THE BARRIER RAIL FOLLOWS THE PROFILE OF THE GUTTERLINE. FOR RAIL HEIGHT DETAILS AND ASPHALT THICKNESS, SEE THE "VERTICAL CONCRETE BARRIER RAIL SECTION" DETAIL.

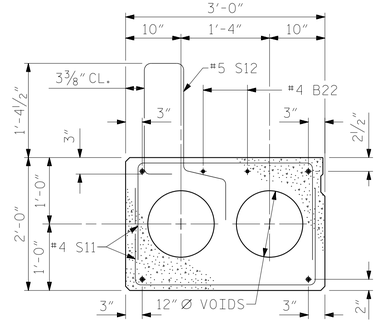

EXTERIOR SLAB SECTION

(FOR PRESTRESSED STRAND LAYOUT, SEE INTERIOR SLAB SECTION.)

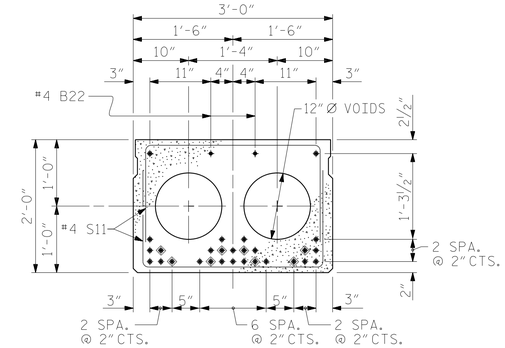

INTERIOR SLAB SECTION (70' UNIT)

(28 STRANDS REQUIRED)

0.6'' Ø LOW RELAXATION STRAND LAYOUT

◈ BOND SHALL BE BROKEN ON THESE STRANDS FOR A DISTANCE OF 12'-0" FROM END OF CORED SLAB UNIT. SEE STANDARD SPECIFICATIONS, ARTICLE 1078-7.

DEBONDING LEGEND

FIXED END

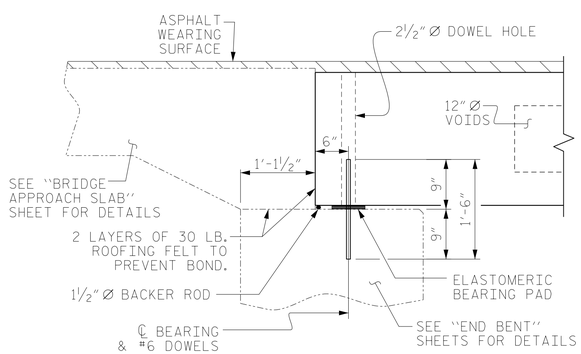

SECTION AT END BENT

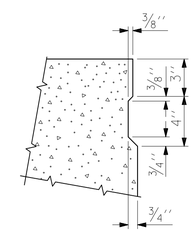

SHEAR KEY DETAIL

NOTE: OMIT SHEAR KEY ON OUTSIDE FACE OF EXTERIOR CORED SLABS.

PERMITTED THREADED INSERT CAST IN OUTSIDE FACE OF EXTERIOR UNIT AND RECESSED ⅜". SIZE TO BE DETERMINED BY CONTRACTOR.

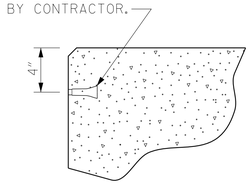

THREADED INSERT DETAIL

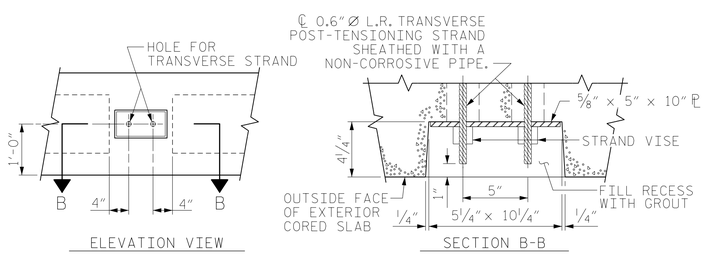

GROUTED RECESS AT END OF POST-TENSIONED STRAND-CORED SLABS

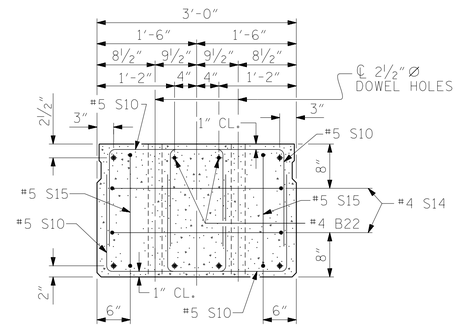

END ELEVATION

SHOWING PLACEMENT OF DOUBLE STIRRUPS AND LOCATION OF DOWEL HOLES. (STRAND LAYOUT NOT SHOWN.) INTERIOR SLAB UNIT SHOWN-EXTERIOR SLAB UNIT SIMILAR EXCEPT SHEAR KEY LOCATION.

PROJECT NO. BP11.R013
WILKES COUNTY
STATION: 13+63.00 -L-

SHEET 1 OF 3

NORTH CAROLINA PROFESSIONAL SEAL 040018 ENGINEER TONY T. LAWS
4/11/2025

RS&H

RS&H Architects-Engineers-Planners, Inc.
8521 Six Forks Road, Suite 400
Raleigh, NC 27615
919-926-4100 FAX 919-846-9080
www.rsandh.com
North Carolina License Nos. 50073 * F-0493 * C-28

DOCUMENT NOT CONSIDERED FINAL UNLESS ALL SIGNATURES COMPLETED

STATE OF NORTH CAROLINA
DEPARTMENT OF TRANSPORTATION
RALEIGH
STANDARD

3'-0'' X 2'-0'' PRESTRESSED CONCRETE CORED SLAB UNIT

REVISIONS						SHEET NO.
NO.	BY:	DATE:	NO.	BY:	DATE:	S-6
1			3			TOTAL SHEETS
2			4			18

ASSEMBLED BY : M. ACOSTA	DATE : 11/2024
CHECKED BY : T. LAWS	DATE : 11/2024
DRAWN BY : MAA 6/10	REV. BY : MAA/TMG 09/14
CHECKED BY : MKT 7/10	

4/7/2025
\\rsandh.com\files\Transportation\P\10034238018_Div 11 Wilkes 280\Design\Structures\CAD\401_011_BP11.R013_SMU_CS_S-6_960280.dgn
ScaccaJ

STD. NO. 24PCS4_33_90S

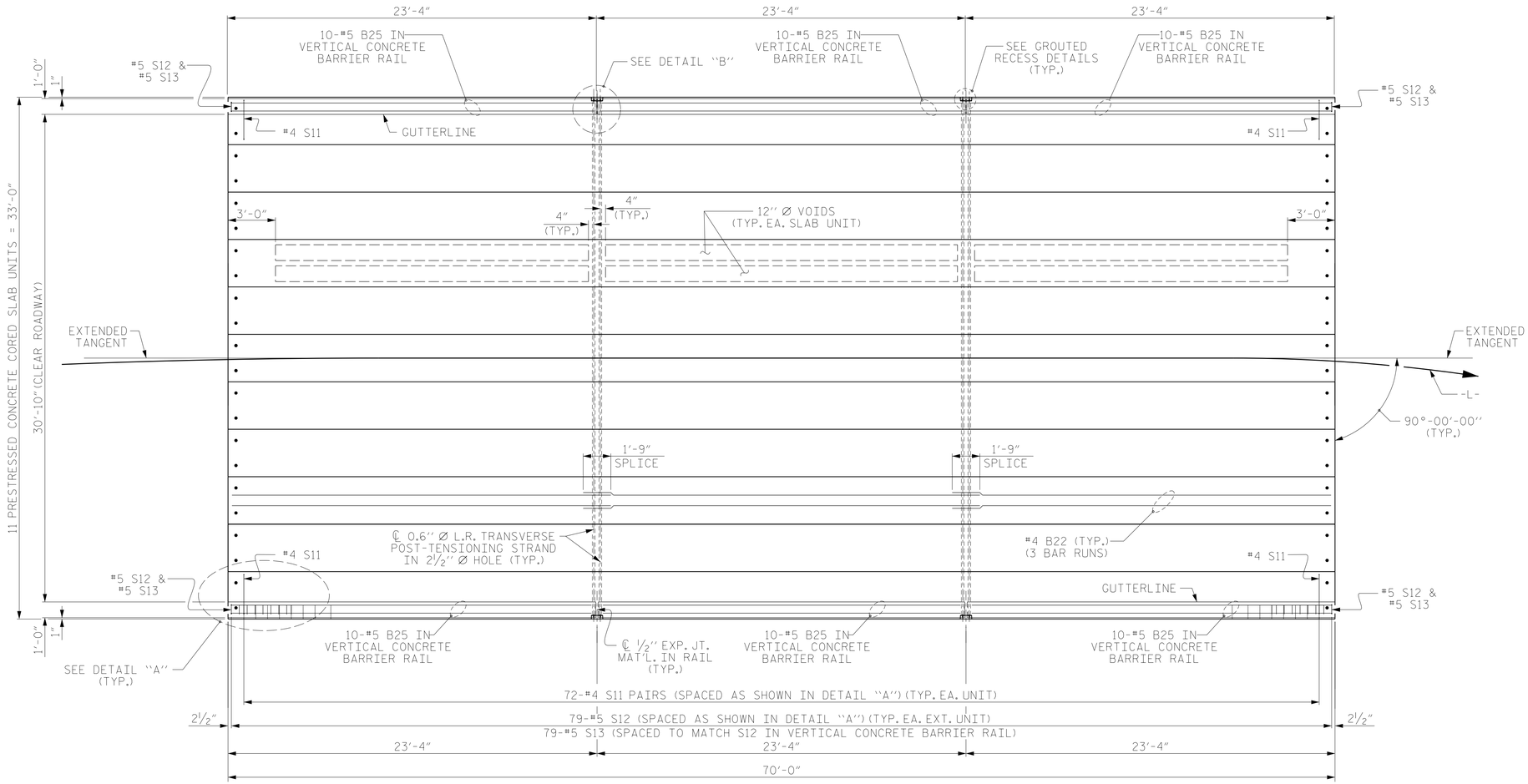

PLAN OF UNIT

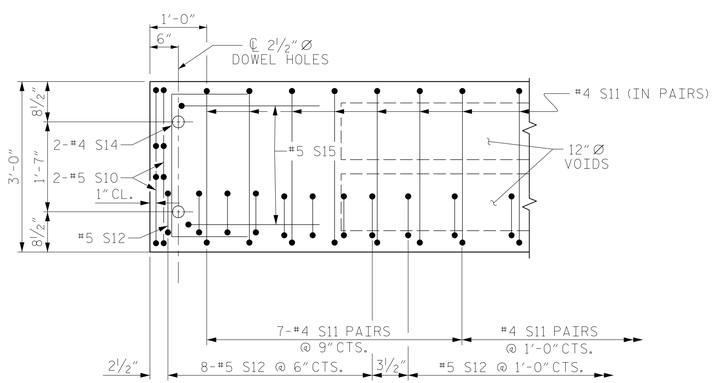

DETAIL "A"

(TYPICAL EACH END OF UNIT)
NOTE: EXTERIOR UNIT SHOWN - INTERIOR UNIT SIMILAR EXCEPT OMIT #5 S12 BARS.

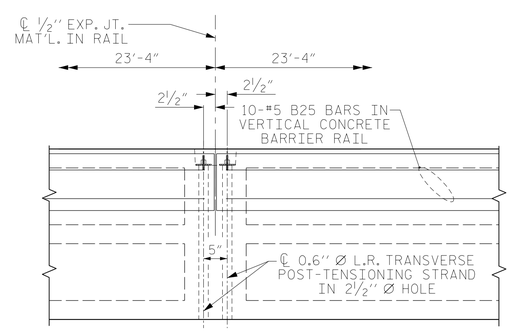

DETAIL "B"

#4 S11 BARS MAY BE SHIFTED AS NECESSARY TO MAINTAIN 1" CLEAR TO GROUTED RECESS AND 2½" Ø TRANSVERSE POST-TENSIONING STRAND HOLES

PROJECT NO. BP11.R013
WILKES COUNTY
STATION: 13+63.00 -L-

SHEET 2 OF 3

STATE OF NORTH CAROLINA
DEPARTMENT OF TRANSPORTATION
RALEIGH
STANDARD

PLAN OF 70' UNIT 30'-10" CLEAR ROADWAY 90° SKEW

NORTH CAROLINA PROFESSIONAL SEAL 040218 ENGINEER TONY T. LAWS
4/11/2025

RS&H

RS&H Architects-Engineers-Planners, Inc.
8521 Six Forks Road, Suite 400
Raleigh, NC 27615
919-926-4100 FAX 919-846-9080
www.rsandh.com
North Carolina License Nos. 50073 * F-0493 * C-28

DOCUMENT NOT CONSIDERED FINAL UNLESS ALL SIGNATURES COMPLETED

REVISIONS						
NO.	BY:	DATE:	NO.	BY:	DATE:	
1			3			
2			4			

SHEET NO. S-7
TOTAL SHEETS 18

ASSEMBLED BY : M. ACOSTA	DATE : 11/2024
CHECKED BY : T. LAWS	DATE : 11/2024
DRAWN BY : MAA 6/10	REV. BY : MAA/TMG 12/5/11
CHECKED BY : MKT 7/10	REV. BY : MAA/TMG 8/14

4/7/2025
\\rsandh.com\files\Transportation\P\10034238018_Div 11 Wilkes 280\Design\Structures\CAD\401_013_BP11.R013_SMU_CS_S-7_960280.dgn
ScaccaJ

STD. NO. 24PCS_33_90S_70L

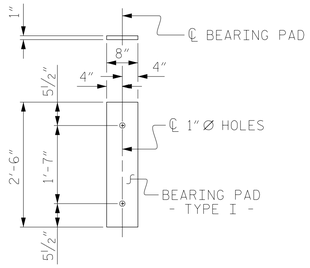

FIXED END
(TYPE I - 22 REQ'D)

ELASTOMERIC BEARING DETAILS

ELASTOMER IN ALL BEARINGS SHALL BE 60 DUROMETER HARDNESS.

BILL OF MATERIAL FOR ONE 70' CORED SLAB UNIT

				EXTERIOR UNIT		INTERIOR UNIT	
BAR	NUMBER	SIZE	TYPE	LENGTH	WEIGHT	LENGTH	WEIGHT
B22	6	#4	STR	24'-6"	98	24'-6"	98
S10	8	#5	3	4'-9"	40	4'-9"	40
S11	144	#4	3	5'-10"	561	5'-10"	561
✳S12	79	#5	1	5'-7"	460		
S14	4	#4	3	5'-7"	15	5'-7"	15
S15	4	#5	3	7'-1"	30	7'-1"	30
REINFORCING STEEL			LBS.		744		744
✳EPOXY COATED REINFORCING STEEL			LBS.		460		
7000 P.S.I. CONCRETE			CU. YDS.		11.8		11.8
0.6"Ø L.R. STRANDS			No.		28		28

BAR TYPES

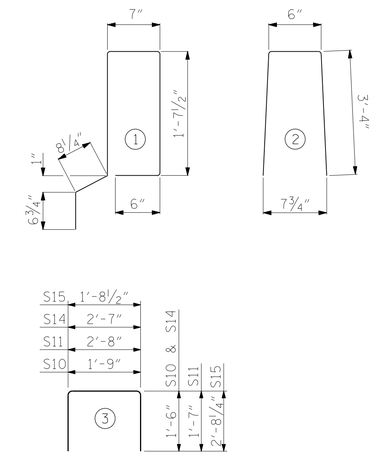

ALL BAR DIMENSIONS ARE OUT TO OUT

GUTTERLINE ASPHALT THICKNESS & RAIL HEIGHT

	ASPHALT OVERLAY THICKNESS @ MID-SPAN	RAIL HEIGHT @ MID-SPAN
70' UNITS	2"	3'-8"

BILL OF MATERIAL FOR VERTICAL CONCRETE BARRIER RAIL

BAR	BARS PER PAIR OF EXTERIOR UNITS	TOTAL NO.	SIZE	TYPE	LENGTH	WEIGHT
	70' UNIT					
✳B25	60	60	#5	STR	22'-11"	1434
✳S13	158	158	#5	2	7'-2"	1181
✳EPOXY COATED REINFORCING STEEL				LBS.		2615
CLASS AA CONCRETE				CU.YDS.		18.1
TOTAL VERTICAL CONCRETE BARRIER RAIL				LN. FT.		140.25

NOTES

ALL PRESTRESSING STRANDS SHALL BE 7-WIRE LOW RELAXATION GRADE 270 STRANDS AND SHALL CONFORM TO AASHTO M203 EXCEPT FOR SAMPLING REQUIREMENTS WHICH SHALL BE IN ACCORDANCE WITH THE STANDARD SPECIFICATIONS.

ALL REINFORCING STEEL CAST WITH THE CORED SLAB SECTIONS SHALL BE GRADE 60 AND SHALL BE INCLUDED IN THE UNIT PRICE BID FOR PRESTRESSED CONCRETE CORED SLABS.

RECESSES FOR TRANSVERSE STRANDS SHALL BE GROUTED AFTER THE TENSIONING OF THE STRANDS.

THE 2½"Ø DOWEL HOLES AT FIXED ENDS OF SLAB SECTIONS SHALL BE FILLED WITH NON-SHRINK GROUT.

THE BACKER RODS SHALL CONFORM TO THE REQUIREMENTS OF TYPE M BOND BREAKER. SEE SECTION 1028 OF THE STANDARD SPECIFICATIONS.

WHEN CORED SLABS ARE CAST, AN INTERNAL HOLD-DOWN SYSTEM SHALL BE EMPLOYED TO PREVENT VOIDS FROM RISING OR MOVING SIDEWAYS. AT LEAST SIX WEEKS PRIOR TO CASTING CORED SLABS, THE CONTRACTOR SHALL SUBMIT TO THE ENGINEER FOR REVIEW AND COMMENT, DETAILED DRAWINGS OF THE PROPOSED HOLD-DOWN SYSTEM. IN ADDITION TO STRUCTURAL DETAILS, LOCATION AND SPACING OF THE HOLD-DOWNS SHALL BE INDICATED.

THE TRANSFER OF LOAD FROM THE ANCHORAGES TO THE CORED SLAB UNIT SHALL BE DONE WHEN THE CONCRETE HAS REACHED A COMPRESSIVE STRENGTH OF NOT LESS THAN THE REQUIRED STRENGTH SHOWN IN THE "CONCRETE RELEASE STRENGTH" TABLE.

ALL REINFORCING STEEL IN VERTICAL CONCRETE BARRIER RAILS SHALL BE EPOXY COATED.

PRESTRESSING STRANDS SHALL BE CUT FLUSH WITH THE CORED SLAB UNIT ENDS.

APPLY EPOXY PROTECTIVE COATING TO CORED SLAB UNIT ENDS.

GROOVED CONTRACTION JOINTS, ½" IN DEPTH, SHALL BE TOOLED IN ALL EXPOSED FACES OF THE BARRIER RAIL AND IN ACCORDANCE WITH ARTICLE 825-10(B) OF THE STANDARD SPECIFICATIONS. A CONTRACTION JOINT SHALL BE LOCATED AT EACH THIRD POINT BETWEEN BARRIER RAIL EXPANSION JOINTS. ONLY ONE CONTRACTION JOINT IS REQUIRED AT MIDPOINT OF BARRIER RAIL SEGMENTS LESS THAN 20 FEET IN LENGTH AND NO CONTRACTION JOINTS ARE REQUIRED FOR THOSE SEGMENTS LESS THAN 10 FEET IN LENGTH.

FLAME CUTTING OF THE TRANSVERSE POST-TENSIONING STRAND IS NOT ALLOWED.

MAINTAIN A SYMMETRIC TENSION FORCE BETWEEN EACH PAIR OF TRANSVERSE POST TENSIONING STRANDS IN THE DIAPHRAGM.

THE #4 S11 STIRRUPS MAY BE SHIFTED AS NECESSARY TO MAINTAIN 1" CLEAR TO THE GROUTED RECESS.

FOR GROUT FOR STRUCTURES, SEE SPECIAL PROVISIONS.

THE PERMITTED THREADED INSERTS ARE DETAILED AS AN OPTION FOR THE CONTRACTOR TO ATTACH FALSEWORK AND FORMWORK DURING CONSTRUCTION.

THE PERMITTED THREADED INSERTS IN THE EXTERIOR UNITS SHALL BE SIZED BY THE CONTRACTOR, SPACED AT 4'-0" CENTERS AND GALVANIZED IN ACCORDANCE WITH SECTION 1076 OF THE STANDARD SPECIFICATIONS. STAINLESS STEEL THREADED INSERTS MAY BE USED AS AN ALTERNATE.

THE PERMITTED THREADED INSERTS SHALL BE GROUTED BY THE CONTRACTOR IMMEDIATELY FOLLOWING REMOVAL OF THE FALSEWORK.

THE COST OF THE PERMITTED THREADED INSERTS SHALL BE INCLUDED IN THE PRICE BID FOR THE PRECAST UNITS.

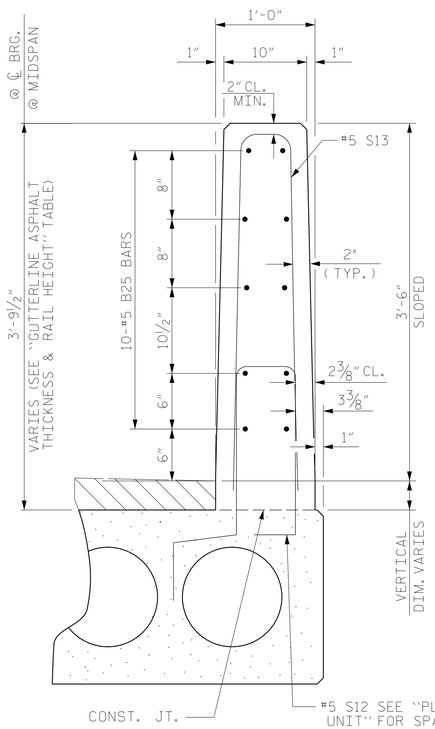

SECTION THRU RAIL

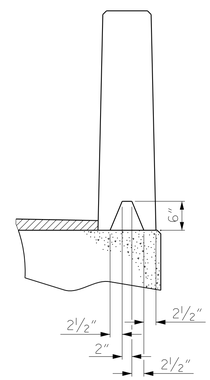

SECTION S-S
AT DAM IN OPEN JOINT
(THIS IS TO BE USED ONLY WHEN SLIP FORM IS USED)

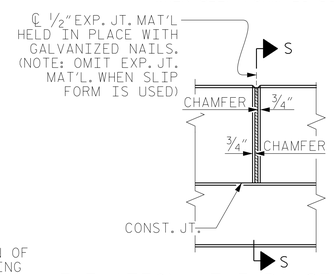

ELEVATION AT EXPANSION JOINTS

CORED SLABS REQUIRED

	NUMBER	LENGTH	TOTAL LENGTH
70' UNIT			
EXTERIOR C.S.	2	70'-0"	140'-0"
INTERIOR C.S.	9	70'-0"	630'-0"
TOTAL	11		770'-0"

DEAD LOAD DEFLECTION AND CAMBER

	3'-0" x 2'-0"
70' CORED SLAB UNIT	0.6"Ø L.R. STRAND
CAMBER (SLAB ALONE IN PLACE)	2¼" ↑
DEFLECTION DUE TO SUPERIMPOSED DEAD LOAD✳✳	¾" ↓
FINAL CAMBER	1½" ↑

✳✳ INCLUDES FUTURE WEARING SURFACE

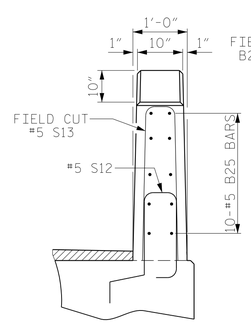

END VIEW

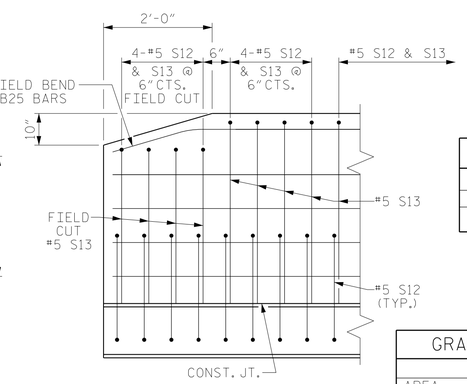

SIDE VIEW

CONCRETE RELEASE STRENGTH

UNIT	PSI
70' UNITS	5500

GRADE 270 STRANDS

	0.6"Ø L.R.
AREA (SQUARE INCHES)	0.217
ULTIMATE STRENGTH (LBS. PER STRAND)	58,600
APPLIED PRESTRESS (LBS. PER STRAND)	43,950

VERTICAL CONCRETE BARRIER RAIL DETAILS

END OF RAIL DETAILS

PROJECT NO. BP11.R013
WILKES COUNTY
STATION: 13+63.00 -L-

SHEET 3 OF 3

DOCUMENT NOT CONSIDERED FINAL UNLESS ALL SIGNATURES COMPLETED

NORTH CAROLINA PROFESSIONAL SEAL 040317 ENGINEER TONY T. LAWS
4/11/2025

RS&H
RS&H Architects-Engineers-Planners, Inc.
8521 Six Forks Road, Suite 400
Raleigh, NC 27615
919-926-4100 FAX 919-846-9080
www.rsandh.com
North Carolina License Nos. 50073 * F-0493 * C-28

STATE OF NORTH CAROLINA
DEPARTMENT OF TRANSPORTATION
RALEIGH
STANDARD

3'-0" X 2'-0"
PRESTRESSED CONCRETE
CORED SLAB UNIT

REVISIONS								SHEET NO.
NO.	BY:	DATE:	NO.	BY:	DATE:			S-8
1			3					TOTAL SHEETS
2			4					18

ASSEMBLED BY : M. ACOSTA	DATE : 11/2024
CHECKED BY : T. LAWS	DATE : 11/2024
DRAWN BY : MAA 6/10	REV. BY : MAA/THC 5/18
CHECKED BY : MKT 7/10	

4/7/2025
\\rsandh.com\files\Transportation\P\10034238018_Div 11 Wilkes 280\Design\Structures\CAD\401_015_BP11.R013_SMU_CS_S-8_960280.dgn
ScaccaJ

STD. NO. 24PCS3_33_90S

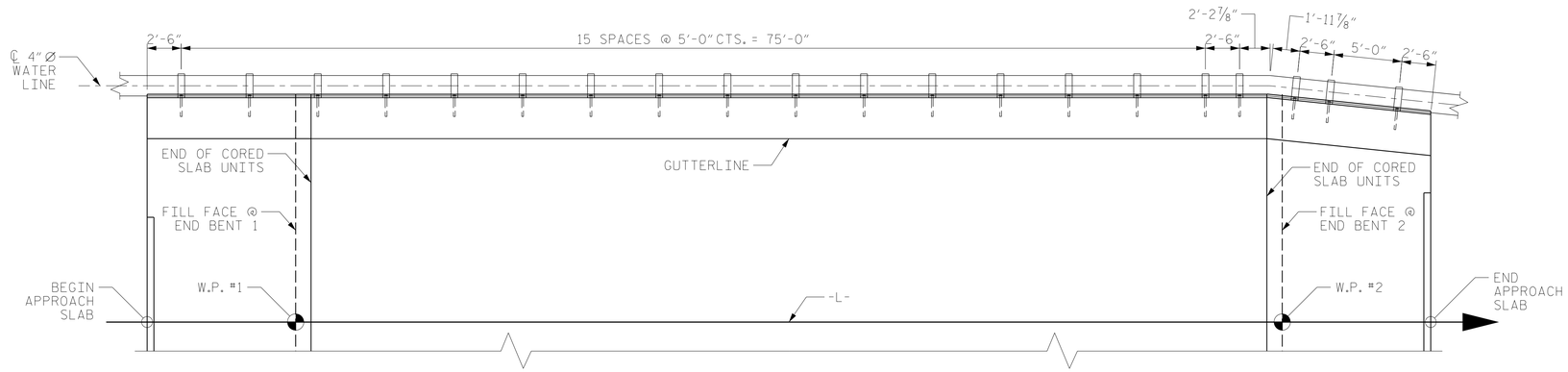

PLAN OF PIPE CLAMP SPACING

NOTES:

BOLTS SHALL CONFORM TO THE REQUIREMENTS OF ASTM A307 AND NUTS SHALL CONFORM TO THE REQUIREMENTS OF AASTHO M291. BOLTS, NUTS, AND WASHERS SHALL BE GALVANIZED.

IN LIEU OF 1/4" STRAP PLATE, THE CONTRACTOR MAY SUBMIT AN ALTERNATE STRAP PLATE TO THE ENGINEER FOR APPROVAL.

AT THE CONTRACTOR'S OPTION, STAINLESS STEEL BOLTS, NUTS AND WASHERS MAY BE USED AS AN ALTERNATE FOR THE 3/4" Ø GALVANIZED BOLTS, NUTS AND WASHERS. THEY SHALL CONFORM TO OR EXCEED THE MECHANICAL REQUIREMENTS OF ASTM A307. THE USE OF THIS ALTERNATE SHALL BE APPROVED BY THE ENGINEER.

STEEL SPACER AND STRAP PLATE SHALL BE ASTM A36 GRADE 36 STRUCTURAL STEEL AND SHALL BE GALVANIZED TO ASTM A123.

LEVEL ONE FIELD TESTING IS REQUIRED AND THE YIELD LOAD OF THE ANCHOR BOLTS IS 10.0 KIPS. FOR ADHESIVELY ANCHORED ANCHOR BOLTS, SEE THE STANDARD SPECIFICATIONS.

THE CONTRACTOR SHALL TAKE NECESSARY PRECAUTIONS TO AVOID DAMAGING THE REINFORCING STEEL IN THE VERTICAL CONCRETE BARRIER RAIL.

THE COST OF THE PIPE CLAMP ASSEMBLY WHICH CONSISTS OF INSTALLATION, LABOR, BOLTS, NUTS, WASHERS, STRAP PLATE AND STEEL SPACER AND ALL INCIDENTALS SHALL BE INCLUDED IN THE UNIT CONTRACT BID PRICE FOR VERTICAL CONCRETE BARRIER RAIL.

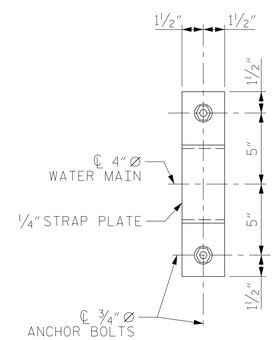

ELEVATION

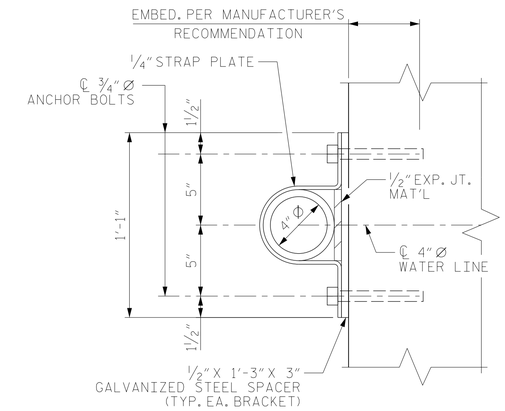

CLAMP DETAIL

PIPE CLAMP DETAILS

(20 REQUIRED)

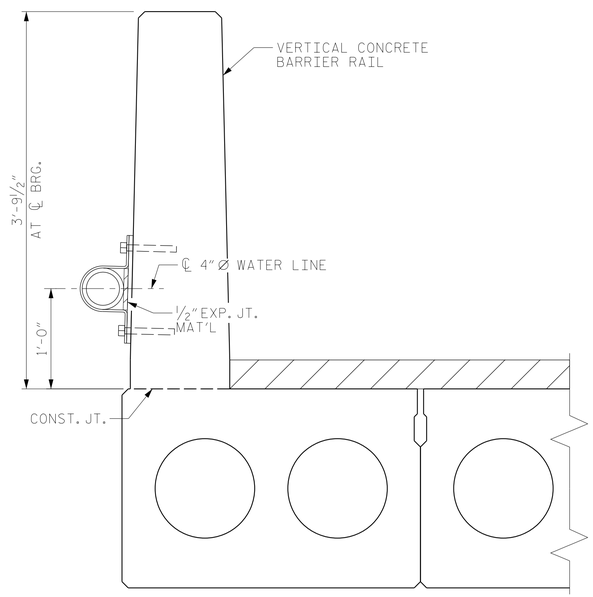

SECTION THRU WATER LINE

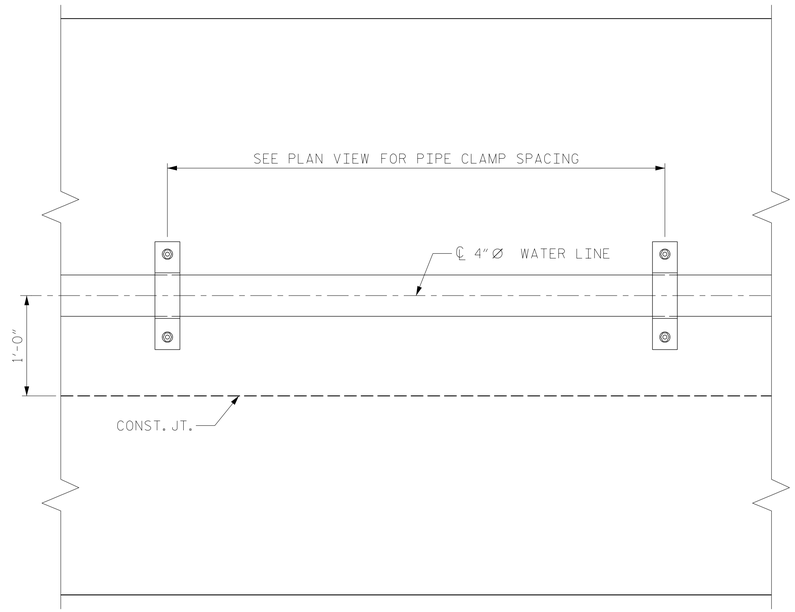

PARTIAL ELEVATION

PROJECT NO. BP11.R013

WILKES COUNTY

STATION: 13+63.00 -L-

NORTH CAROLINA PROFESSIONAL SEAL 040341 ENGINEER TONY R. LAWS JR.
Signed by: Tony R. Laws Jr.
Date: 4/11/2025

4/11/2025

RS&H

RS&H Architects-Engineers-Planners, Inc.
8521 Six Forks Road, Suite 400
Raleigh, NC 27615
919-926-4100 FAX 919-846-9080
www.rsandh.com
North Carolina License Nos. 50073 * F-0493 * C-28

STATE OF NORTH CAROLINA
DEPARTMENT OF TRANSPORTATION
RALEIGH

BRIDGE MOUNTED WATER LINE DETAILS

REVISIONS							SHEET NO.
NO.	BY:	DATE:	NO.	BY:	DATE:		S-9
1			3				TOTAL SHEETS
2			4				18

DOCUMENT NOT CONSIDERED FINAL UNLESS ALL SIGNATURES COMPLETED

DRAWN BY :	M. R. ACOSTA	DATE :	02/2025
CHECKED BY :	M. B. KHIN	DATE :	02/2025
DESIGN ENGINEER OF RECORD:	T. R. LAWS	DATE :	03/2025

4/7/2025
\\rsandh.com\files\Transportation\P\10034238018_Div 11 Wilkes 280\Design\Structures\CAD\401_017_BP11.R013_SMU_UT_S-9_960280.dgn
ScaccaJ

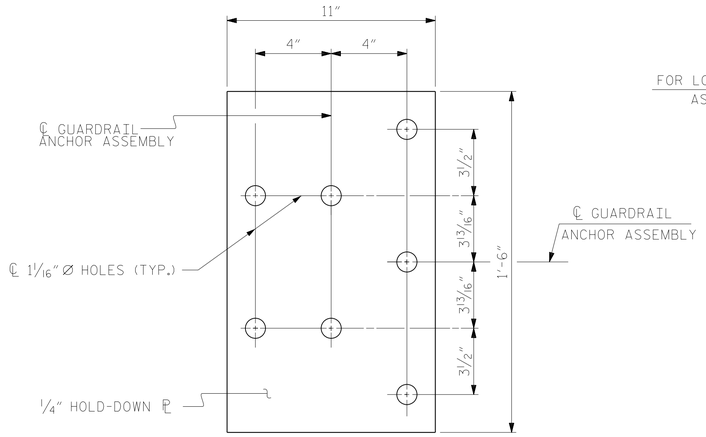

PLAN

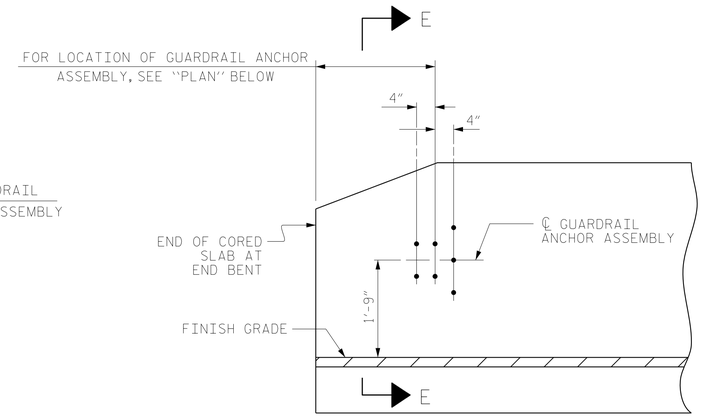

ELEVATION

NOTES

THE GUARDRAIL ANCHOR ASSEMBLY SHALL CONSIST OF A 1/4" HOLD DOWN PLATE AND 7 - 7/8" Ø BOLTS WITH NUTS AND WASHERS.

THE HOLD-DOWN PLATE SHALL CONFORM TO AASHTO M270 GRADE 36. AFTER FABRICATION, THE HOLD-DOWN PLATE SHALL BE HOT-DIP GALVANIZED IN ACCORDANCE WITH AASHTO M111.

BOLTS SHALL CONFORM TO THE REQUIREMENTS OF ASTM A307 AND NUTS SHALL CONFORM TO THE REQUIREMENTS OF AASHTO M291. BOLTS, NUTS AND WASHERS SHALL BE GALVANIZED. (AT THE CONTRACTOR'S OPTION, STAINLESS STEEL BOLTS, NUTS AND WASHERS MAY BE USED AS AN ALTERNATE FOR THE 7/8" Ø GALVANIZED BOLTS, NUTS AND WASHERS. THEY SHALL CONFORM TO OR EXCEED THE MECHANICAL REQUIREMENTS OF ASTM A307. THE USE OF THIS ALTERNATE SHALL BE APPROVED BY THE ENGINEER.)

THE GUARDRAIL ANCHOR ASSEMBLY IS REQUIRED AT ALL POINTS WHERE APPROACH GUARDRAIL IS TO BE ATTACHED TO THE END OF BARRIER RAIL. FOR POINTS OF ATTACHMENT, SEE SKETCH.

AFTER INSTALLATION, THE EXPOSED THREAD OF THE BOLT SHALL BE BURRED WITH A SHARP POINTED TOOL.

THE COST OF THE GUARDRAIL ANCHOR ASSEMBLY SHALL BE INCLUDED IN THE UNIT CONTRACT PRICE BID FOR VERTICAL CONCRETE BARRIER RAIL.

THE VERTICAL REINFORCING BARS MAY BE SHIFTED SLIGHTLY IN THE VERTICAL CONCRETE BARRIER RAIL TO CLEAR ASSEMBLY BOLTS.

THE 1 1/4" Ø HOLES SHALL BE FORMED OR DRILLED WITH A CORE BIT. IMPACT TOOLS WILL NOT BE PERMITTED. ANY CONCRETE DAMAGED BY THIS WORK SHALL BE REPAIRED TO THE SATISFACTION OF THE ENGINEER.

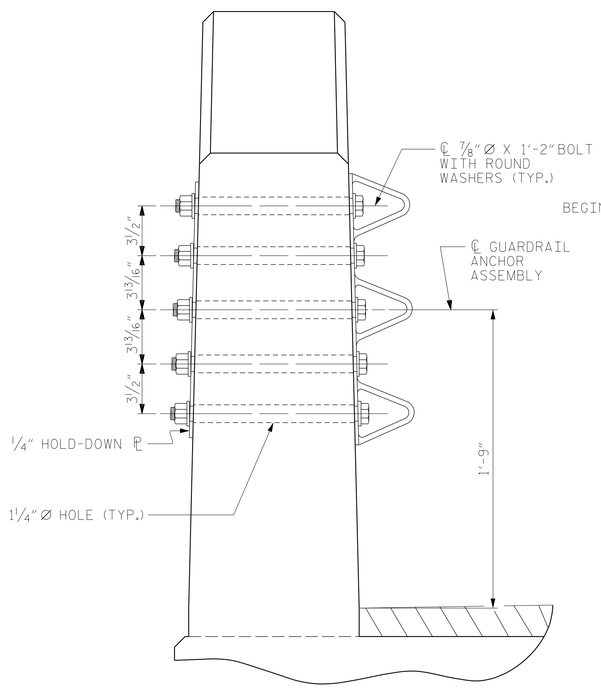

SECTION E-E

GUARDRAIL ANCHOR ASSEMBLY DETAILS

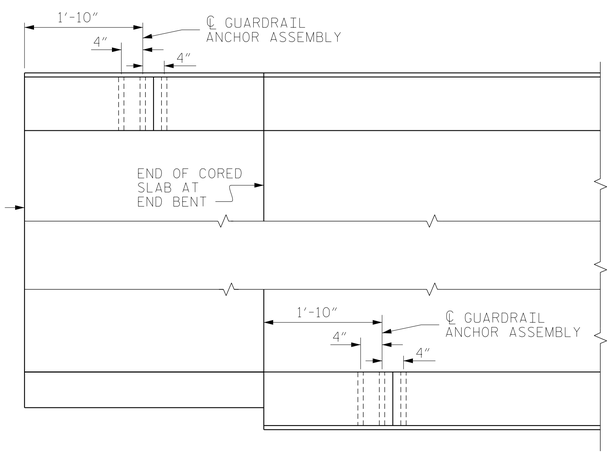

PLAN

LOCATION OF ANCHORS FOR GUARDRAIL

END BENT NO. 1 SHOWN, END BENT NO. 2 SIMILAR.

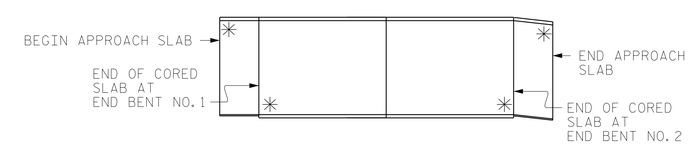

SKETCH SHOWING POINTS OF ATTACHMENT

✳ DENOTES GUARDRAIL ANCHOR ASSEMBLY

PROJECT NO. BP11.R013

WILKES COUNTY

STATION: 13+63.00 -L-

ASSEMBLED BY : M. ACOSTA	DATE : 11/2024
CHECKED BY : T. LAWS	DATE : 11/2024
DRAWN BY : MAA 5/10	REV. BY : MAA/TMG 1/15
CHECKED BY : GM 5/10	REV. BY : MAA/THC 12/17
	REV. BY : MAA/THC 5/18

DOCUMENT NOT CONSIDERED FINAL UNLESS ALL SIGNATURES COMPLETED

NORTH CAROLINA PROFESSIONAL SEAL 040317 ENGINEER TONY F. LAWS
Signed by: Tony F. Laws
DocuSigned by: 4/11/2025

RS&H

RS&H Architects-Engineers-Planners, Inc.
8521 Six Forks Road, Suite 400
Raleigh, NC 27615
919-926-4100 FAX 919-846-9080
www.rsandh.com
North Carolina License Nos. 50073 * F-0493 * C-28

STATE OF NORTH CAROLINA
DEPARTMENT OF TRANSPORTATION
RALEIGH

STANDARD
GUARDRAIL ANCHORAGE DETAILS
FOR VERTICAL CONCRETE BARRIER RAIL

REVISIONS							
NO.	BY:	DATE:	NO.	BY:	DATE:		
1			3				
2			4				

SHEET NO. S-10
TOTAL SHEETS 18

STD. NO. GRA3 (SHT 1)

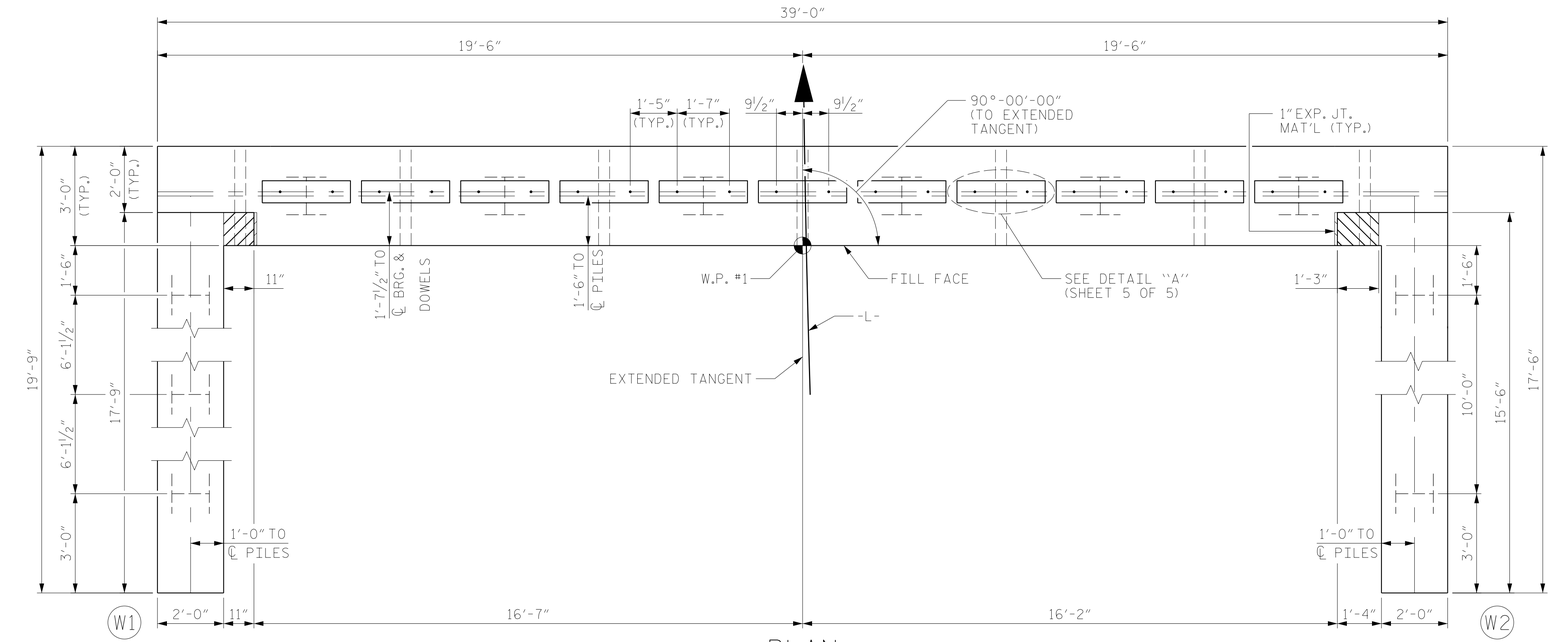

PLAN

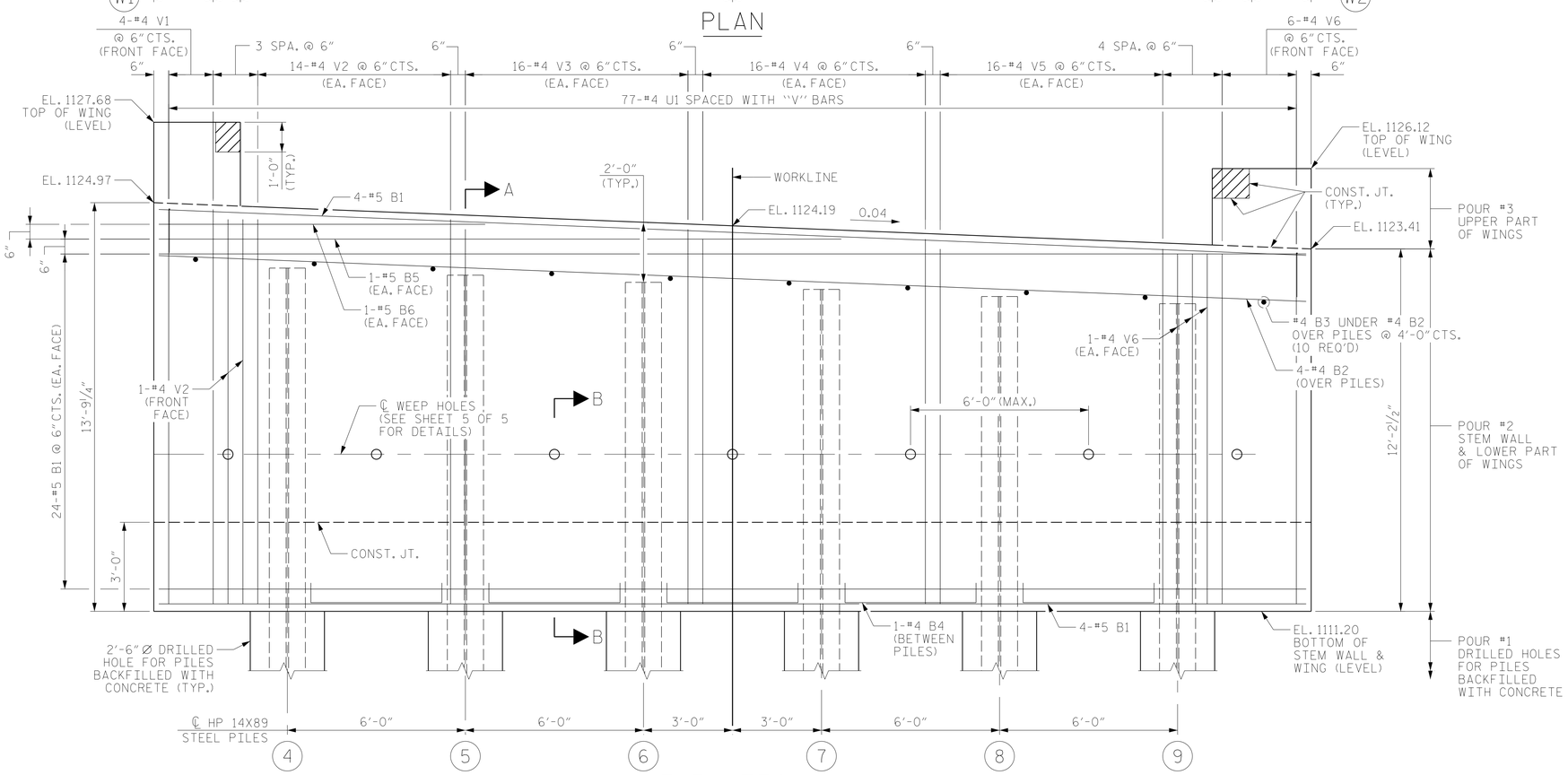

ELEVATION

WINGS NOT SHOWN FOR CLARITY.
FOR SECTION A-A AND B-B, SEE SHEET 5 OF 5.

NOTES:

U1 BARS IN THE STEM WALL MAY BE SHIFTED AS NECESSARY TO CLEAR DOWELS.

WEEP HOLES MAY BE SHIFTED AS NECESSARY TO AVOID CONFLICTS WITH REINFORCING STEEL.

THE CONCRETE IN THE SHADED AREA OF THE WING SHALL BE POURED AFTER THE VERTICAL CONCRETE BARRIER RAIL IS CAST IF SLIP FORMING IS USED.

FOR PILE SPLICE DETAILS, SEE SHEET 5 OF 5.

FOR WING DETAILS, SEE SHEET 3 OF 5.

FOR PILE LOCATIONS, SEE "FOUNDATION LAYOUT" SHEET.

TOP OF PILE ELEVATIONS	
4	1122.79
5	1122.55
6	1122.31
7	1122.07
8	1121.83
9	1121.59

PROJECT NO. BP11.R013

WILKES COUNTY

STATION: 13+63.00 -L-

SHEET 1 OF 5

STATE OF NORTH CAROLINA
DEPARTMENT OF TRANSPORTATION
RALEIGH

SUBSTRUCTURE

END BENT NO. 1

NORTH CAROLINA PROFESSIONAL SEAL ENGINEER TONY R. LAWS

4/11/2025

RS&H

RS&H Architects-Engineers-Planners, Inc.
8521 Six Forks Road, Suite 400
Raleigh, NC 27615
919-926-4100 FAX 919-846-9080
www.rsandh.com
North Carolina License Nos. 50073 * F-0493 * C-28

REVISIONS						SHEET NO.
NO.	BY:	DATE:	NO.	BY:	DATE:	S-11
1			3			TOTAL SHEETS
2			4			18

DRAWN BY : M. R. ACOSTA DATE : 11/2024
CHECKED BY : T. R. LAWS DATE : 11/2024
DESIGN ENGINEER OF RECORD: T. R. LAWS DATE : 03/2025

DOCUMENT NOT CONSIDERED FINAL UNLESS ALL SIGNATURES COMPLETED

4/7/2025
\\rsandh.com\files\Transportation\P\10034238018_Div 11 Wilkes 280\Design\Structures\CAD\401_021_BP11.R013_SMU_E_S-11_960280.dgn
ScaccaJ

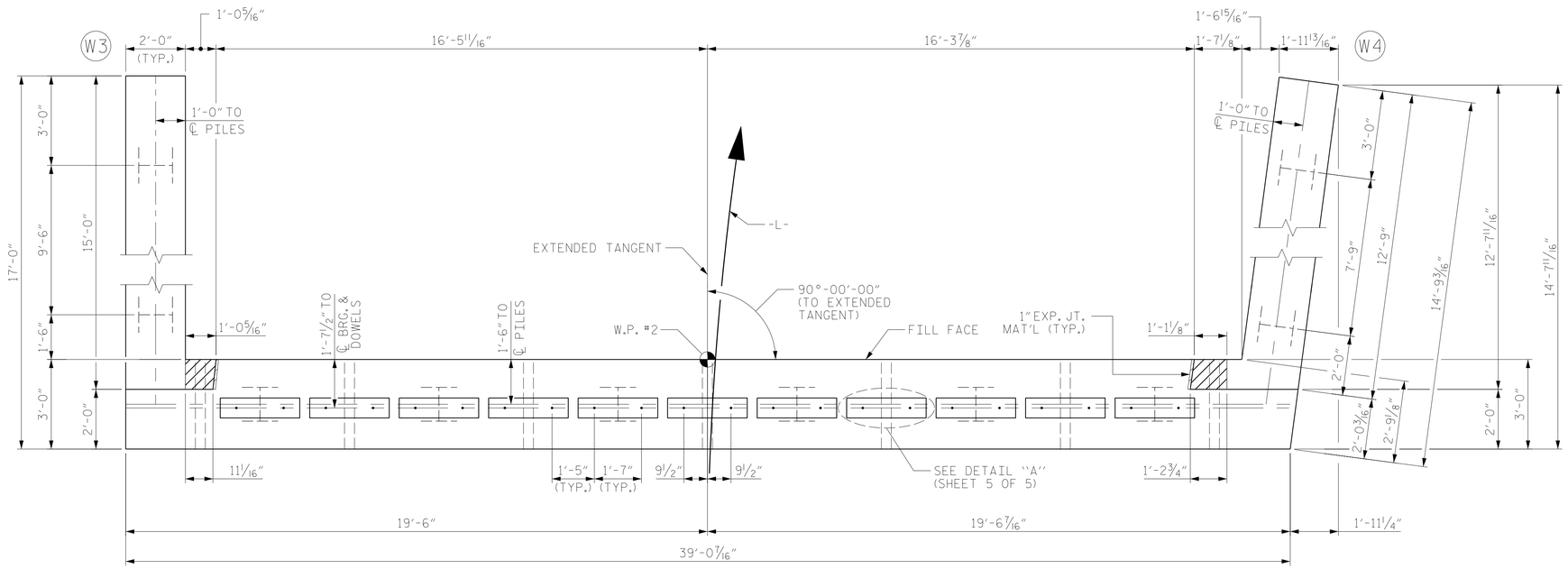

PLAN

NOTES:

U1 BARS IN THE STEM WALL MAY BE SHIFTED AS NECESSARY TO CLEAR DOWELS.

WEEP HOLES MAY BE SHIFTED AS NECESSARY TO AVOID CONFLICTS WITH REINFORCING STEEL.

THE CONCRETE IN THE SHADED AREA OF THE WING SHALL BE POURED AFTER THE VERTICAL CONCRETE BARRIER RAIL IS CAST IF SLIP FORMING IS USED.

FOR PILE SPLICE DETAILS, SEE SHEET 5 OF 5.

FOR WING DETAILS, SEE SHEET 4 OF 5.

FOR PILE LOCATIONS, SEE "FOUNDATION LAYOUT" SHEET.

TOP OF PILE ELEVATIONS	
3	1123.02
4	1122.78
5	1122.54
6	1122.30
7	1122.06
8	1121.82

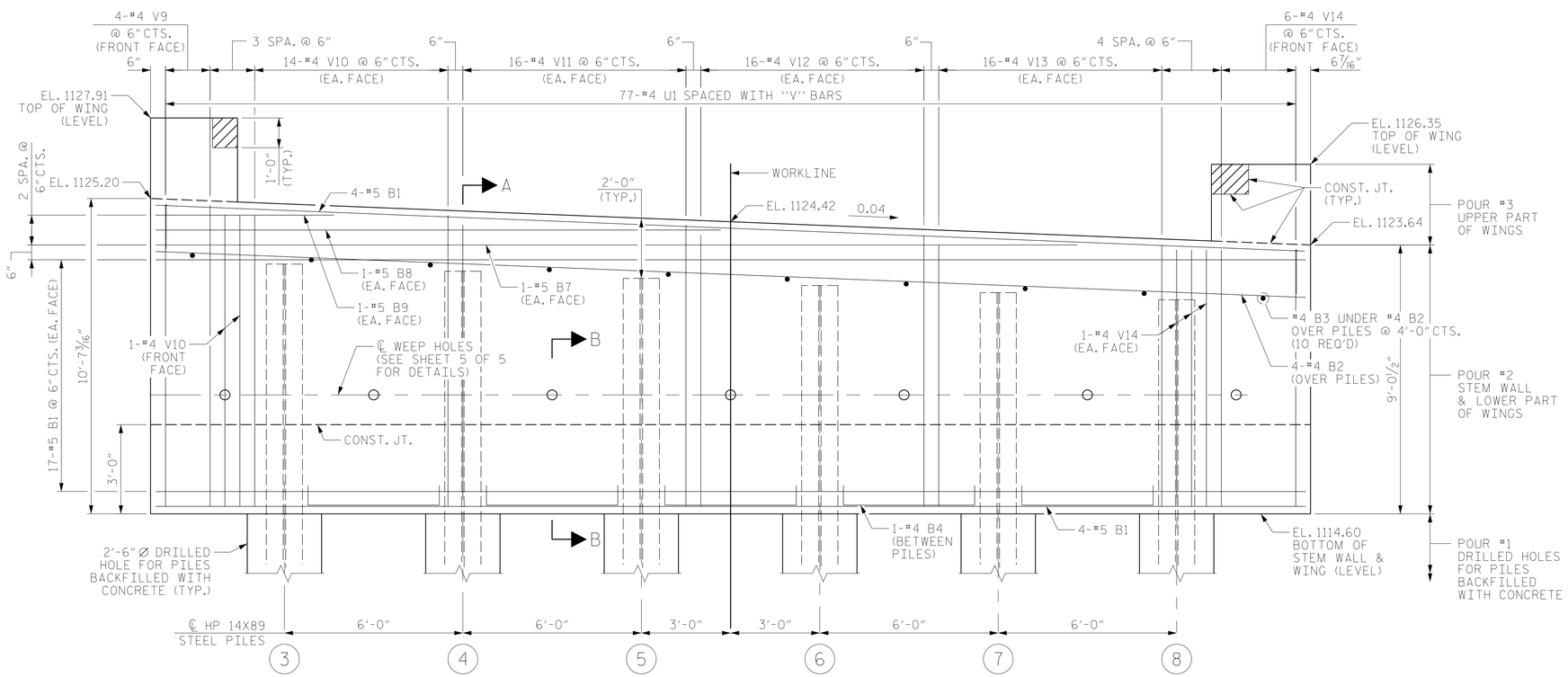

ELEVATION

WINGS NOT SHOWN FOR CLARITY.
FOR SECTION A-A AND B-B, SEE SHEET 5 OF 5.

PROJECT NO. BP11.R013

WILKES COUNTY

STATION: 13+63.00 -L-

SHEET 2 OF 5

STATE OF NORTH CAROLINA
DEPARTMENT OF TRANSPORTATION
RALEIGH

SUBSTRUCTURE

END BENT NO. 2

NORTH CAROLINA PROFESSIONAL SEAL 040037 ENGINEER TONY R. LAWS, JR. — SEALED BY: T. R. LAWS

4/11/2025

RS&H

RS&H Architects-Engineers-Planners, Inc.
8521 Six Forks Road, Suite 400
Raleigh, NC 27615
919-926-4100 FAX 919-846-9080
www.rsandh.com
North Carolina License Nos. 50073 * F-0493 * C-28

REVISIONS							
NO.	BY:	DATE:	NO.	BY:	DATE:	SHEET NO.	
1			3			S-12	
2			4			TOTAL SHEETS	
						18	

DOCUMENT NOT CONSIDERED FINAL UNLESS ALL SIGNATURES COMPLETED

DRAWN BY :	M. R. ACOSTA	DATE :	11/2024
CHECKED BY :	T. R. LAWS	DATE :	11/2024
DESIGN ENGINEER OF RECORD:	T. R. LAWS	DATE :	03/2025

4/7/2025
\\rsandh.com\files\Transportation\P\10034238018_Div 11 Wilkes 280\Design\Structures\CAD\401_023_BP11.R013_SMU_E_S-12_960280.dgn
ScaccaJ

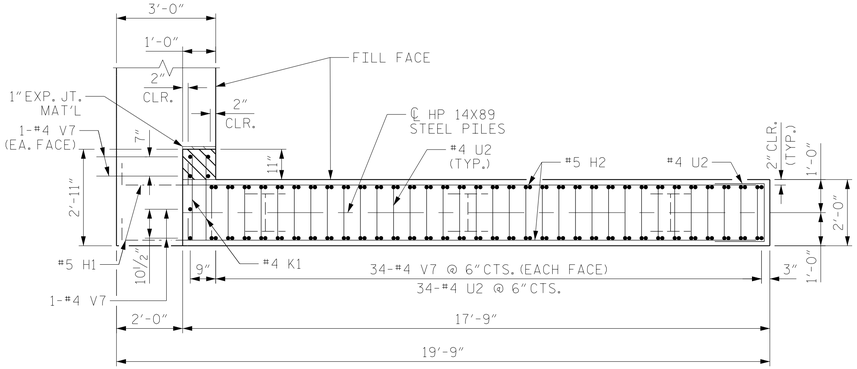

PLAN OF WING (W1)

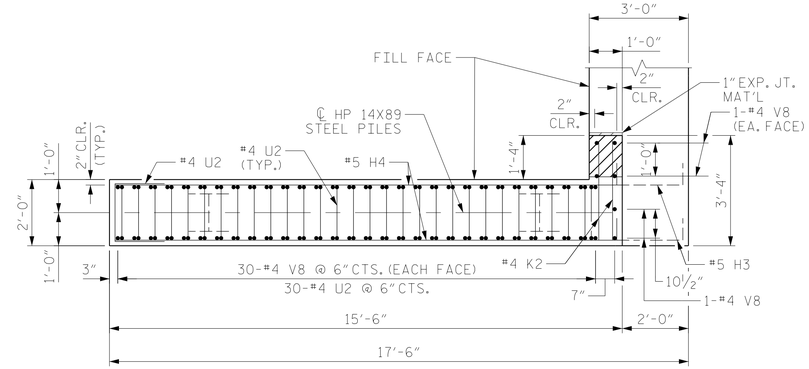

PLAN OF WING (W2)

TOP OF PILE ELEVATIONS	
1	1122.97
2	1122.97
3	1122.97
10	1121.41
11	1121.41

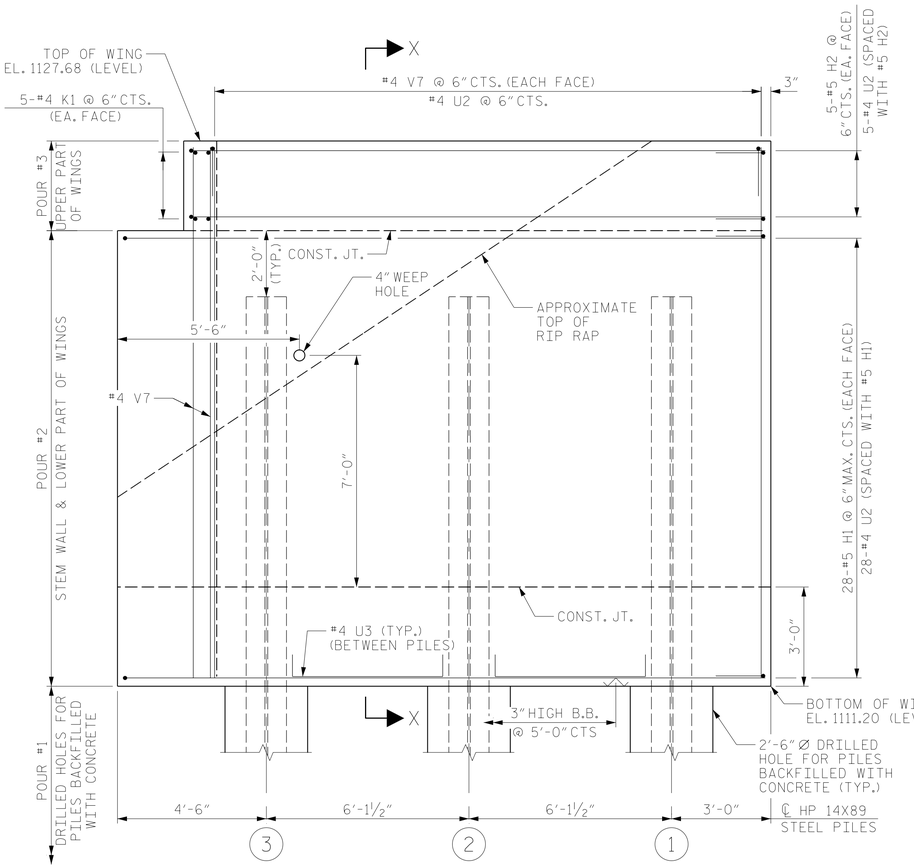

ELEVATION OF WING (W1)

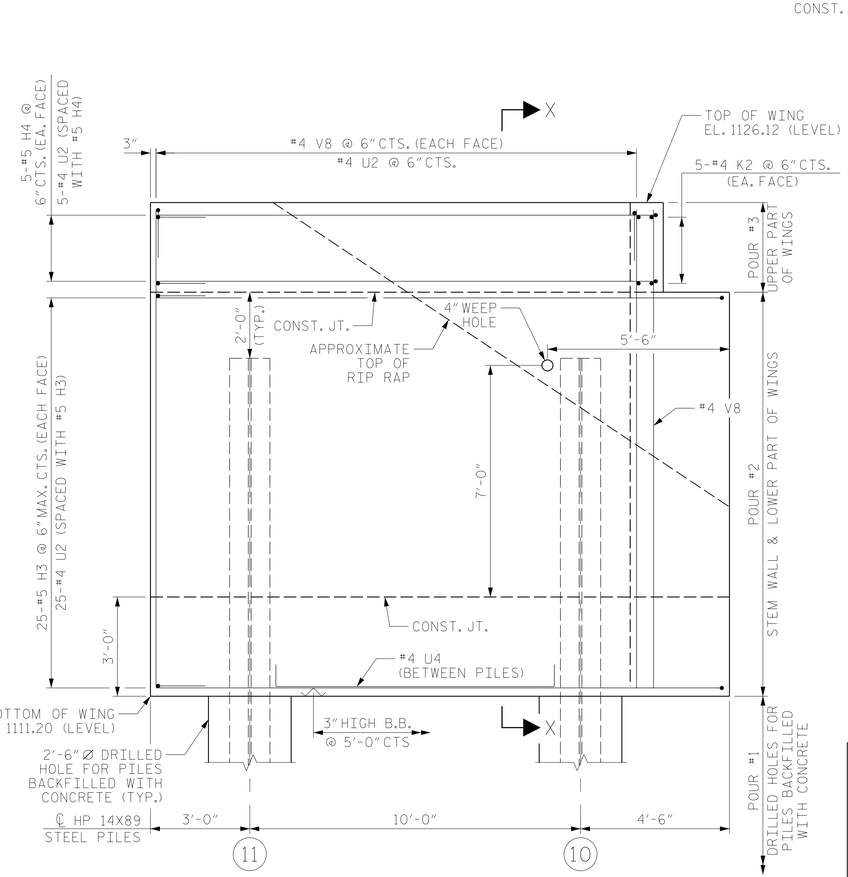

ELEVATION OF WING (W2)

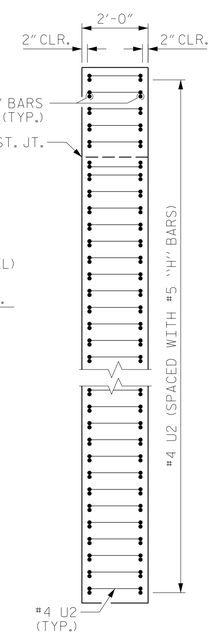

END VIEW

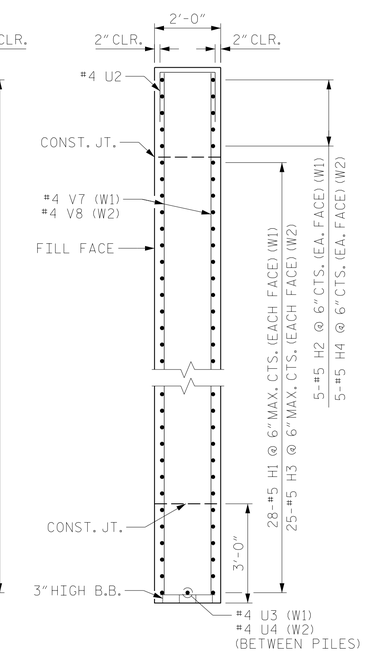

SECTION X-X

PROJECT NO. BP11.R013

WILKES COUNTY

STATION: 13+63.00 -L-

SHEET 3 OF 5

STATE OF NORTH CAROLINA
DEPARTMENT OF TRANSPORTATION
RALEIGH

SUBSTRUCTURE

END BENT NO. 1
WING DETAILS

NORTH CAROLINA PROFESSIONAL SEAL 040318 ENGINEER TONY R. LAWS
4/11/2025

RS&H

RS&H Architects-Engineers-Planners, Inc.
8521 Six Forks Road, Suite 400
Raleigh, NC 27615
919-926-4100 FAX 919-846-9080
www.rsandh.com
North Carolina License Nos. 50073 * F-0493 * C-28

REVISIONS						SHEET NO.
NO.	BY:	DATE:	NO.	BY:	DATE:	S-13
1			3			TOTAL SHEETS
2			4			18

DRAWN BY : M. R. ACOSTA DATE : 11/2024
CHECKED BY : T. R. LAWS DATE : 11/2024
DESIGN ENGINEER OF RECORD: T. R. LAWS DATE : 03/2025

DOCUMENT NOT CONSIDERED FINAL UNLESS ALL SIGNATURES COMPLETED

4/7/2025
\\rsandh.com\files\Transportation\P\10034238018_Div 11 Wilkes 280\Design\Structures\CAD\401_025_BP11.R013_SMU_E_S-13_960280.dgn
ScaccaJ

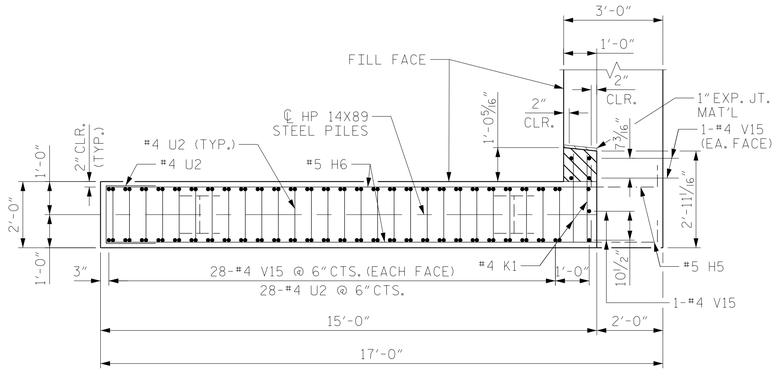

PLAN OF WING (W3)

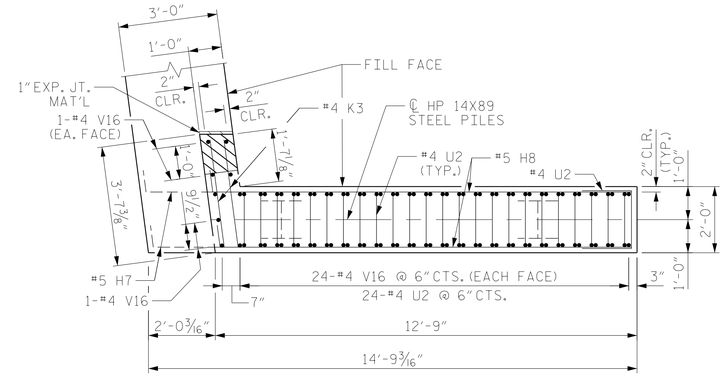

PLAN OF WING (W4)

TOP OF PILE ELEVATIONS	
1	1123.20
2	1123.20
9	1121.64
10	1121.64

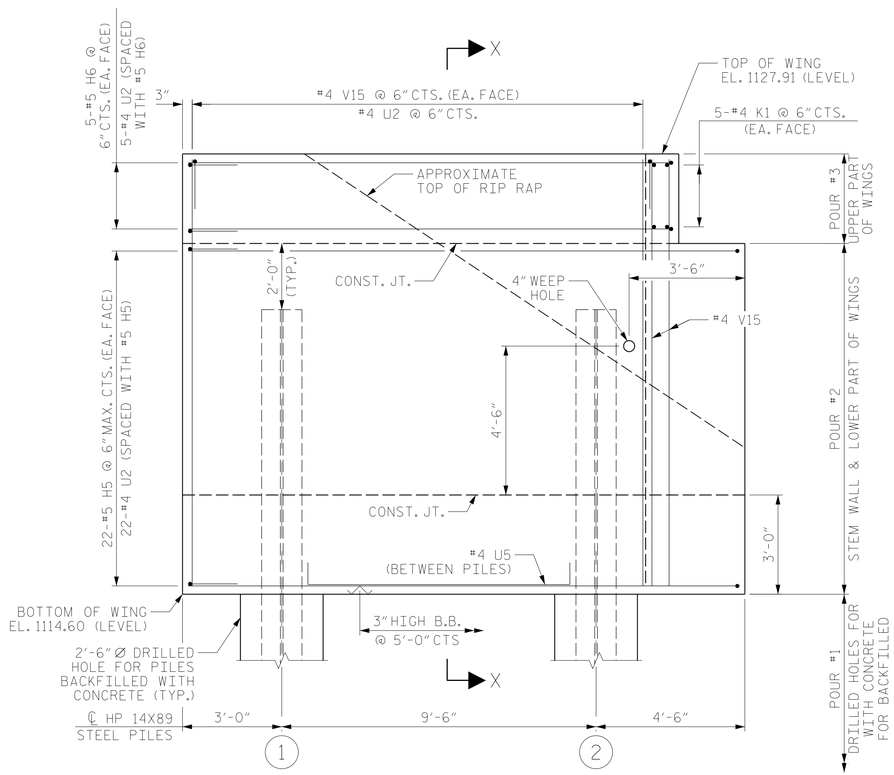

ELEVATION OF WING (W3)

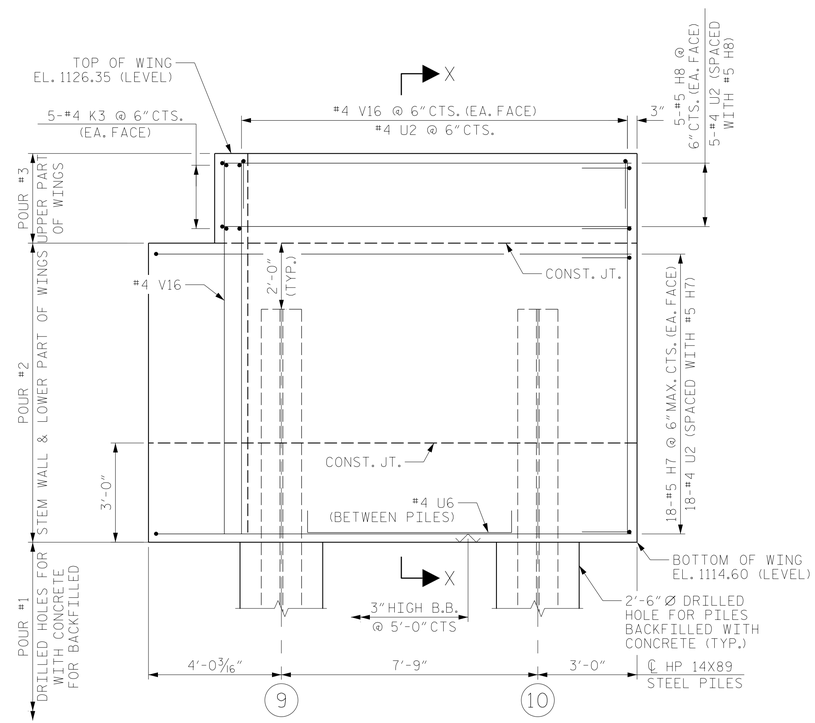

ELEVATION OF WING (W4)

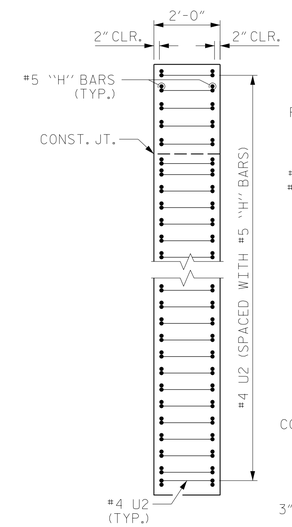

END VIEW

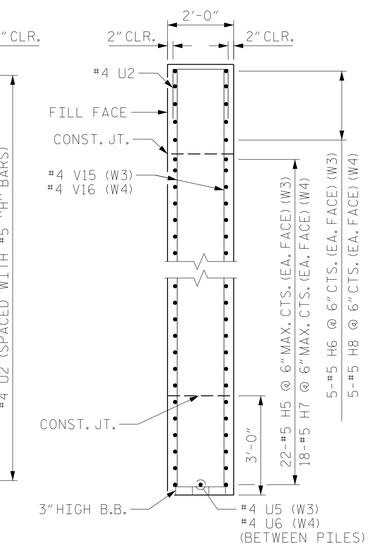

SECTION X-X

PROJECT NO. BP11.R013

WILKES COUNTY

STATION: 13+63.00 -L-

SHEET 4 OF 5

STATE OF NORTH CAROLINA
DEPARTMENT OF TRANSPORTATION
RALEIGH

SUBSTRUCTURE

END BENT NO. 2 WING DETAILS

NORTH CAROLINA PROFESSIONAL SEAL 042218 TONY R. LAWS JR. SEALED ENGINEER
4/11/2025

RS&H

RS&H Architects-Engineers-Planners, Inc.
8521 Six Forks Road, Suite 400
Raleigh, NC 27615
919-926-4100 FAX 919-846-9080
www.rsandh.com
North Carolina License Nos. 50073 * F-0493 * C-28

REVISIONS								SHEET NO.
NO.	BY:	DATE:	NO.	BY:	DATE:			S-14
1			3					TOTAL SHEETS
2			4					18

DOCUMENT NOT CONSIDERED FINAL UNLESS ALL SIGNATURES COMPLETED

DRAWN BY :	M. R. ACOSTA	DATE :	11/2024
CHECKED BY :	T. R. LAWS	DATE :	11/2024
DESIGN ENGINEER OF RECORD:	T. R. LAWS	DATE :	03/2025

4/7/2025
\\rsandh.com\files\Transportation\P\10034238018_Div 11 Wilkes 280\Design\Structures\CAD\401_027_BP11.R013_SMU_E_S-14_960280.dgn
Scaccad

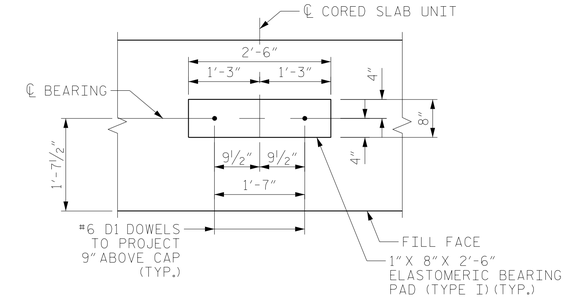

DETAIL "A"

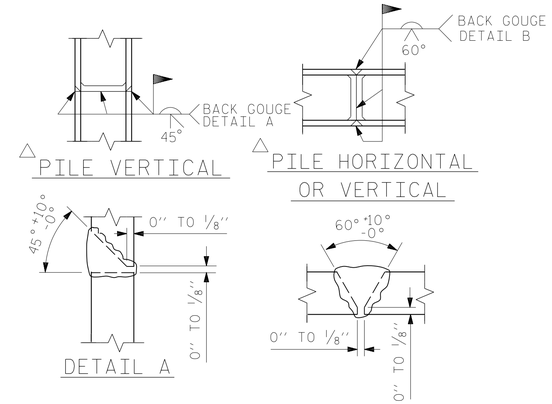

PILE SPLICE DETAILS

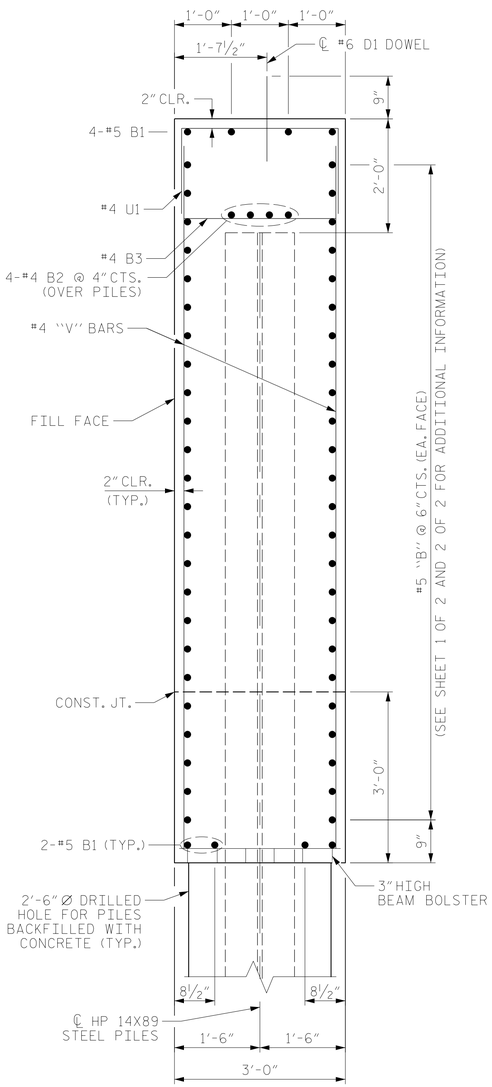

SECTION A-A

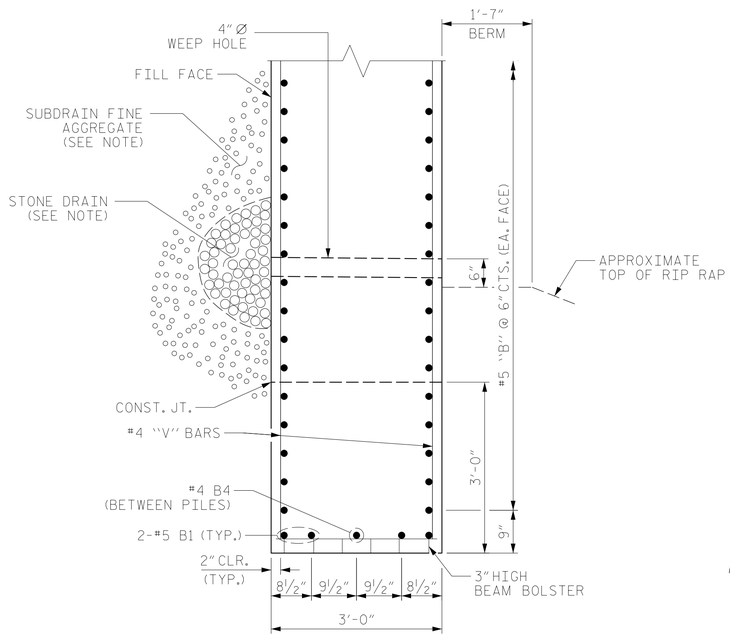

SECTION B-B

BAR TYPES

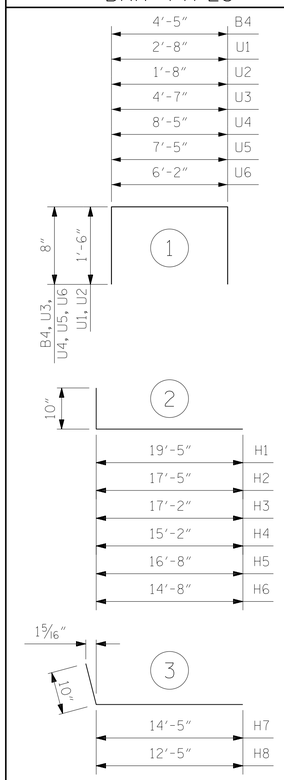

ALL BAR DIMENSIONS ARE OUT TO OUT

BILL OF MATERIAL

END BENT NO. 1

BAR	NO.	SIZE	TYPE	LENGTH	WEIGHT
B1	56	#5	STR	38'-8"	2258
B2	4	#4	STR	38'-8"	103
B3	10	#4	STR	2'-8"	18
B4	5	#4	1	5'-9"	19
B5	2	#5	STR	23'-0"	48
B6	2	#5	STR	11'-0"	23
D1	22	#6	STR	1'-6"	50
H1	56	#5	2	20'-3"	1183
H2	10	#5	2	18'-3"	190
H3	50	#5	2	18'-0"	939
H4	10	#5	2	16'-0"	167
K1	10	#4	STR	2'-7"	17
K2	10	#4	STR	3'-0"	20
U1	77	#4	1	5'-8"	291
U2	127	#4	1	4'-8"	396
U3	2	#4	1	5'-11"	8
U4	1	#4	1	9'-9"	7
V1	4	#4	STR	13'-3"	35
V2	30	#4	STR	12'-11"	259
V3	32	#4	STR	12'-7"	269
V4	32	#4	STR	12'-3"	262
V5	32	#4	STR	11'-11"	255
V6	18	#4	STR	11'-9"	141
V7	74	#4	STR	16'-0"	791
V8	66	#4	STR	14'-6"	639
REINFORCING STEEL					8,388 LBS.

CLASS A CONCRETE BREAKDOWN

POUR #1 (DRILLED HOLES FOR PILES BACKFILLED WITH CONCRETE)	39.0 C.Y.
POUR #2 (STEM WALL AND LOWER PART OF WINGS)	86.6 C.Y.
POUR #3 (UPPER PART OF WINGS)	6.9 C.Y.
TOTAL CLASS A CONCRETE	132.5 C.Y.

END BENT NO. 2

BAR	NO.	SIZE	TYPE	LENGTH	WEIGHT
B1	42	#5	STR	38'-8"	1694
B2	4	#4	STR	38'-8"	103
B3	10	#4	STR	2'-8"	18
B4	5	#4	1	5'-9"	19
B7	2	#5	STR	31'-0"	65
B8	2	#5	STR	19'-0"	40
B9	2	#5	STR	6'-0"	13
D1	22	#6	STR	1'-6"	50
H5	44	#5	2	17'-6"	803
H6	10	#5	2	15'-6"	162
H7	36	#5	3	15'-3"	573
H8	10	#5	3	13'-3"	138
K1	10	#4	STR	2'-7"	17
K3	10	#4	STR	3'-3"	22
U1	77	#4	1	5'-8"	291
U2	102	#4	1	4'-8"	318
U5	1	#4	1	9'-3"	6
U6	1	#4	1	7'-6"	5
V9	4	#4	STR	10'-1"	27
V10	30	#4	STR	9'-9"	195
V11	32	#4	STR	9'-5"	201
V12	32	#4	STR	9'-1"	194
V13	32	#4	STR	8'-9"	187
V14	18	#4	STR	8'-7"	103
V15	63	#4	STR	12'-10"	540
V16	55	#4	STR	11'-4"	416
REINFORCING STEEL					6,200 LBS.

CLASS A CONCRETE BREAKDOWN

POUR #1 (DRILLED HOLES FOR PILES BACKFILLED WITH CONCRETE)	41.9 C.Y.
POUR #2 (STEM WALL AND LOWER PART OF WINGS)	61.5 C.Y.
POUR #3 (UPPER PART OF WINGS)	5.9 C.Y.
TOTAL CLASS A CONCRETE	109.3 C.Y.

NOTES:

FOR SUBSURFACE DRAINAGE AT WEEP HOLES, SEE ARTICLE 414-8 OF THE STANDARD SPECIFICATIONS.

ALL COSTS ASSOCIATED WITH THE WEEP HOLES INCLUDING, BUT NOT LIMITED TO, THE SUBDRAIN, SUBDRAIN FINE AGGREGATE, PVC PIPE, LABOR AND ALL INCIDENTALS SHALL BE INCLUDED IN THE VARIOUS CONTRACT BID ITEMS. NO ADDITIONAL PAYMENT WILL BE MADE.

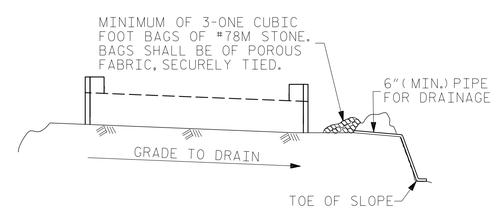

BAGGED STONE AND PIPE SHALL BE PLACED IMMEDIATELY AFTER COMPLETION OF END BENT EXCAVATION. PIPE MAY BE EITHER CONCRETE, CORRUGATED STEEL, CORRUGATED ALUMINUM ALLOY, OR CORRUGATED PLASTIC. PERFORATED PIPE WILL NOT BE ALLOWED.

BAGGED STONE SHALL REMAIN IN PLACE UNTIL THE ENGINEER DIRECTS THAT IT BE REMOVED. THE CONTRACTOR SHALL REMOVE AND DISPOSE OF SILT ACCUMULATIONS AT BAGGED STONE WHEN SO DIRECTED BY THE ENGINEER. BAGS SHALL BE REMOVED AND REPLACED WHENEVER THE ENGINEER DETERMINES THAT THEY HAVE DETERIORATED AND LOST THEIR EFFECTIVENESS.

NO SEPARATE PAYMENT WILL BE MADE FOR THIS WORK AND THE ENTIRE COST OF THIS WORK SHALL BE INCLUDED IN THE UNIT CONTRACT PRICE BID FOR THE SEVERAL PAY ITEMS.

TEMPORARY DRAINAGE AT END BENT

PROJECT NO. BP11.R013
WILKES COUNTY
STATION: 13+63.00 -L-

SHEET 5 OF 5

DOCUMENT NOT CONSIDERED FINAL UNLESS ALL SIGNATURES COMPLETED

NORTH CAROLINA PROFESSIONAL SEAL 040218 ENGINEER TONY R. LAWS JR.
4/11/2025

RS&H

RS&H Architects-Engineers-Planners, Inc.
8521 Six Forks Road, Suite 400
Raleigh, NC 27615
919-926-4100 FAX 919-846-9080
www.rsandh.com
North Carolina License Nos. 50073 · F-0493 · C-28

STATE OF NORTH CAROLINA
DEPARTMENT OF TRANSPORTATION
RALEIGH

SUBSTRUCTURE

END BENT NO. 1 & 2 DETAILS

REVISIONS						SHEET NO.
NO.	BY:	DATE:	NO.	BY:	DATE:	S-15
1			3			TOTAL SHEETS
2			4			18

DRAWN BY :	M. R. ACOSTA	DATE :	11/2024
CHECKED BY :	T. R. LAWS	DATE :	11/2024
DESIGN ENGINEER OF RECORD:	T. R. LAWS	DATE :	03/2025

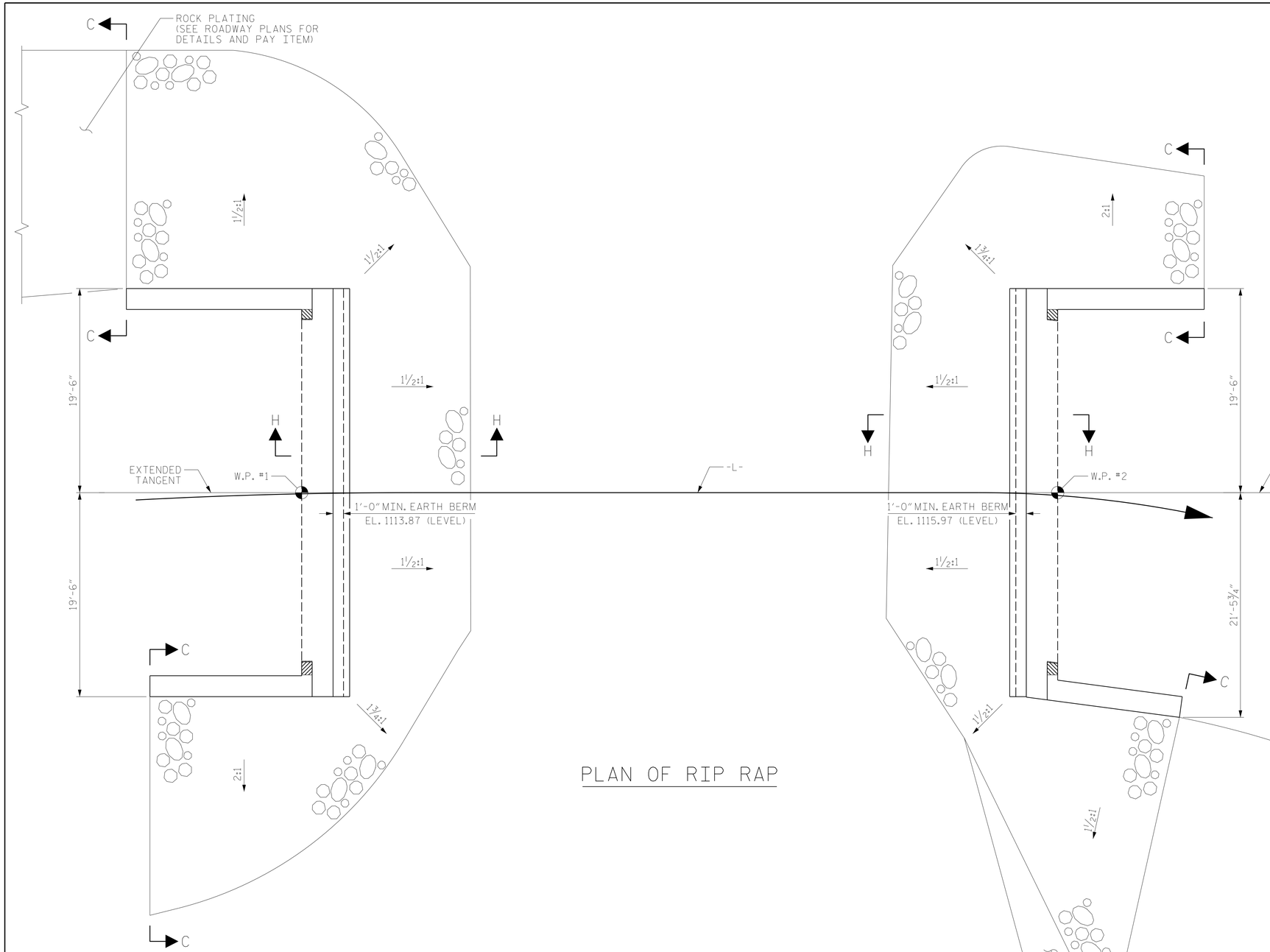

PLAN OF RIP RAP

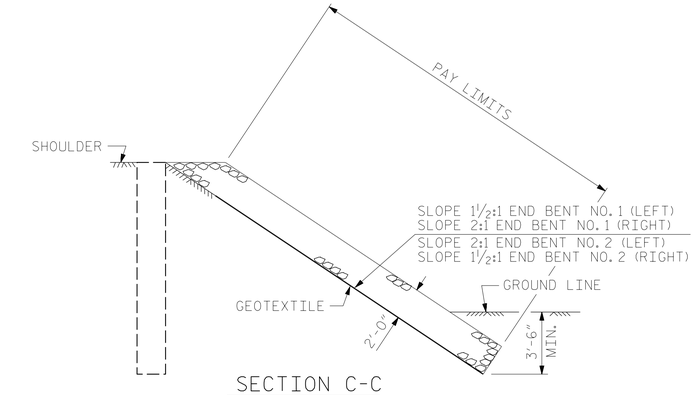

SECTION C-C

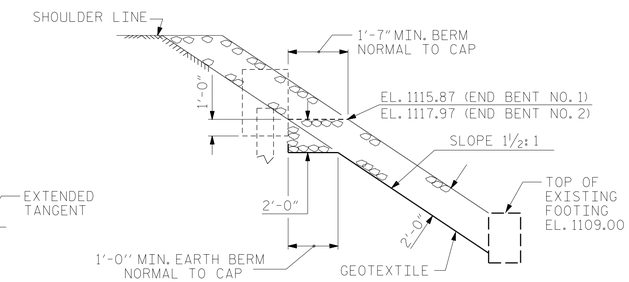

SECTION H-H

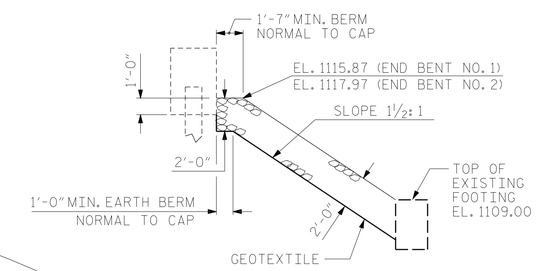

℄ SECTION

BERM RIP RAPPED

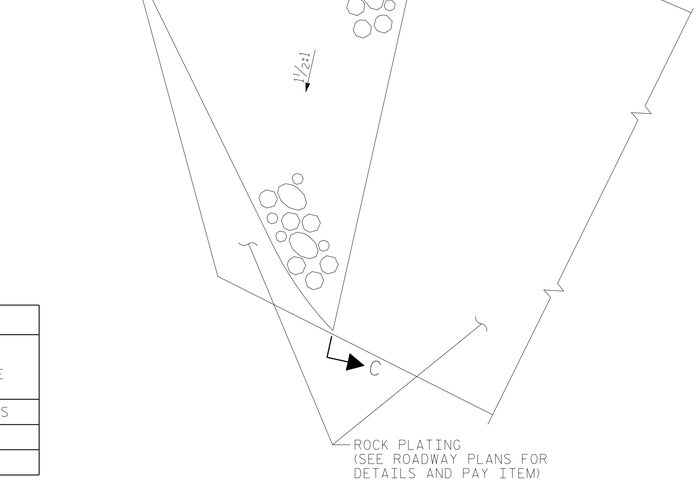

PROJECT NO. BP11.R013

WILKES COUNTY

STATION: 13+63.00 -L-

NOTE:

FOR BERM WIDTH DIMENSIONS, SEE GENERAL DRAWING.

ESTIMATED QUANTITIES

BRIDGE @ STA. 13+63.00 -L-	RIP RAP CLASS II (2'-0" THICK)	GEOTEXTILE FOR DRAINAGE
	TONS	SQUARE YARDS
END BENT NO. 1	295	325
END BENT NO. 2	235	260

DRAWN BY : M. R. ACOSTA DATE : 11/2024
CHECKED BY : T. R. LAWS DATE : 11/2024
DESIGN ENGINEER OF RECORD: T. R. LAWS DATE : 03/2025

DOCUMENT NOT CONSIDERED FINAL UNLESS ALL SIGNATURES COMPLETED

NORTH CAROLINA PROFESSIONAL SEAL 042217 ENGINEER TONY R. LAWS
4/11/2025

RS&H

RS&H Architects-Engineers-Planners, Inc.
8521 Six Forks Road, Suite 400
Raleigh, NC 27615
919-926-4100 FAX 919-846-9080
www.rsandh.com
North Carolina License No. 50073 * F-0493 * C-28

STATE OF NORTH CAROLINA
DEPARTMENT OF TRANSPORTATION
RALEIGH

RIP RAP DETAILS

REVISIONS						SHEET NO.
NO.	BY:	DATE:	NO.	BY:	DATE:	S-16
1			3			TOTAL SHEETS
2			4			18

4/7/2025
\\rsandh.com\files\Transportation\P\10034238018_Div 11 Wilkes 280\Design\Structures\CAD\401_031_BP11.R013_SMU_RR_S-16_960280.dgn
ScaccaJ

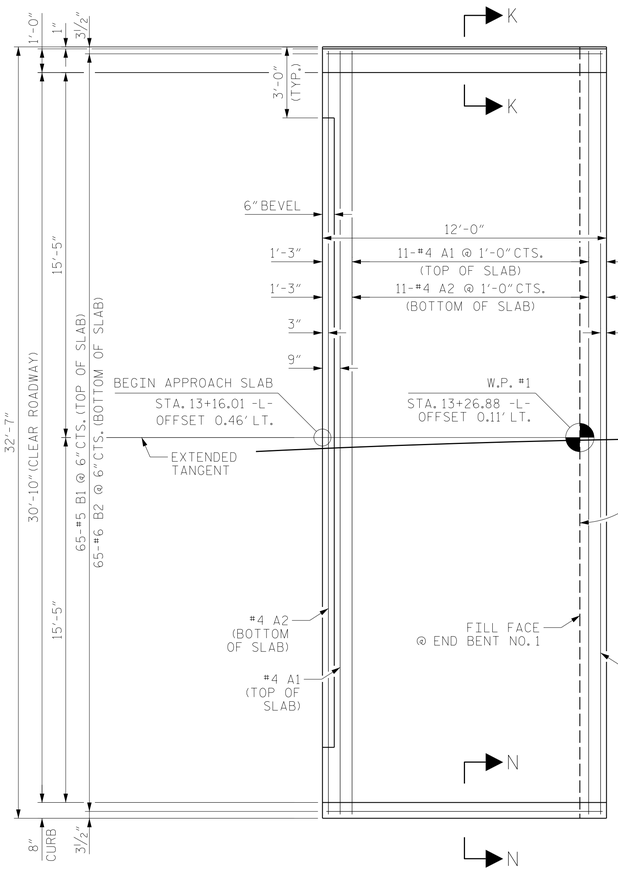

PLAN @ END BENT NO. 1

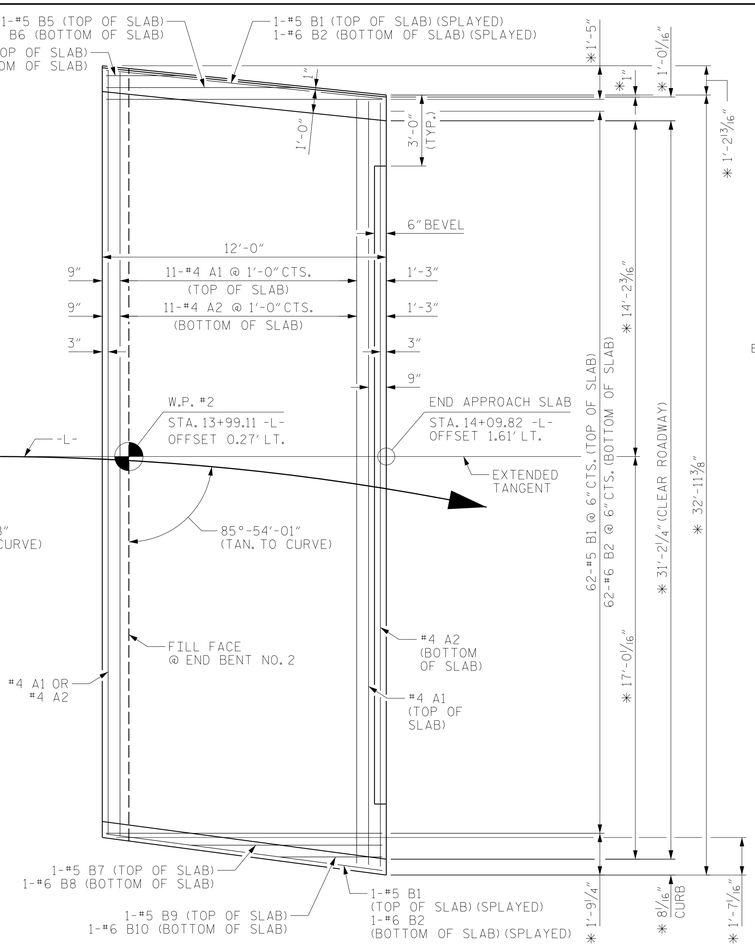

PLAN @ END BENT NO. 2

* NORMAL TO EXTENDED TANGENT

NOTES

FOR BRIDGE APPROACH FILL, SEE ROADWAY PLANS.

AREA BETWEEN THE WINGWALL AND APPROACH SLAB SHALL BE GRADED TO DRAIN THE WATER AWAY FROM THE FILL FACE OF THE BRIDGE AND SHALL BE PAVED. SEE ROADWAY PLANS.

APPROACH SLAB GROOVING IS NOT REQUIRED.

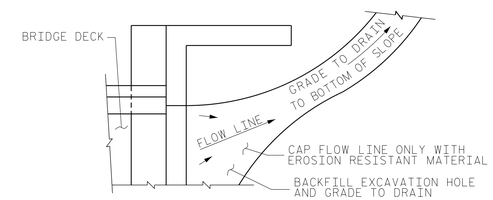

NOTE: IF THE APPROACH SLAB IS NOT CONSTRUCTED IMMEDIATELY AFTER THE BACKFILLING OF THE END BENT EXCAVATION, GRADE TO DRAIN TO THE BOTTOM OF THE SLOPE AND PROVIDE EROSION RESISTANT MATERIAL, SUCH AS FIBERGLASS ROVING OR AS DIRECTED BY THE ENGINEER TO PREVENT SOIL EROSION AND TO PROTECT THE AREA ADJACENT TO THE STRUCTURE. THE CONTRACTOR WILL BE REQUIRED TO REMOVE THESE MATERIALS PRIOR TO CONSTRUCTION OF THE APPROACH SLAB.

TEMPORARY DRAINAGE DETAIL

BILL OF MATERIAL

APPROACH SLAB AT EB NO. 1

BAR	NO.	SIZE	TYPE	LENGTH	WEIGHT
* A1	13	#4	STR	32'-3"	280
A2	13	#4	STR	32'-3"	280
* B1	65	#5	STR	11'-2"	757
B2	65	#6	STR	11'-8"	1139
REINFORCING STEEL					1,419 LBS.
* EPOXY COATED REINFORCING STEEL					1,037 LBS.
CLASS AA CONCRETE					19.8 C.Y.

APPROACH SLAB AT EB NO. 2

BAR	NO.	SIZE	TYPE	LENGTH	WEIGHT
* A1	13	#4	STR	32'-3"	280
A2	13	#4	STR	32'-3"	280
* B1	65	#5	STR	11'-2"	757
B2	65	#6	STR	11'-8"	1139
* B3	1	#5	STR	3'-0"	3
B4	1	#6	STR	3'-0"	5
* B5	1	#5	STR	7'-11"	8
B6	1	#6	STR	7'-11"	12
* B7	1	#5	STR	8'-2"	9
B8	1	#6	STR	8'-2"	12
* B9	1	#5	STR	4'-4"	5
B10	1	#6	STR	4'-4"	7
REINFORCING STEEL					1,455 LBS.
* EPOXY COATED REINFORCING STEEL					1,062 LBS.
CLASS AA CONCRETE					19.6 C.Y.

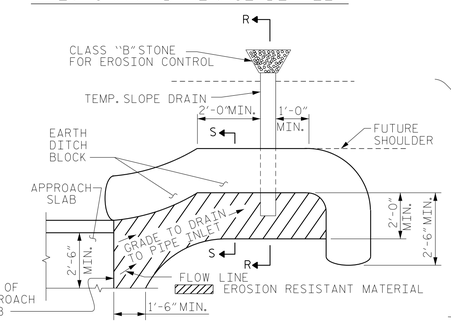

NOTE: IMMEDIATELY AFTER THE CONSTRUCTION OF THE APPROACH SLAB, THE CONTRACTOR SHALL PROVIDE TEMPORARY BERM AND SLOPE DRAIN. CONTRACTOR SHALL GRADE TO PIPE INLET AND PROVIDE EROSION RESISTANT MATERIAL AS SHOWN. THE EROSION RESISTANT MATERIAL SHALL BE EITHER 1) ASPHALT PLANT MIX, TYPE 1 OR TYPE 2, MIN. 2" DEPTH, 2) EROSION CONTROL MAT, OR 3) CONCRETE, AS DIRECTED BY THE ENGINEER. THE SLOPE DRAIN SHALL CONSIST OF A NON-PERFORATED TEMPORARY DRAINAGE PIPE, 12 INCHES IN DIAMETER.

PLAN VIEW

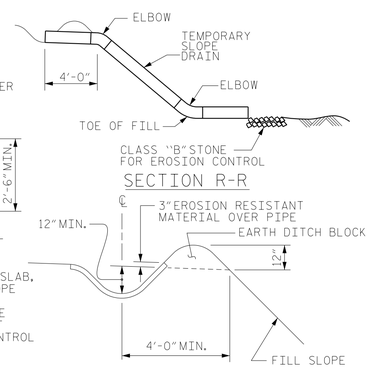

SECTION S-S

TEMPORARY BERM AND SLOPE DRAIN DETAILS

(TO BE USED WHEN SHOULDER BERM GUTTER IS REQUIRED)

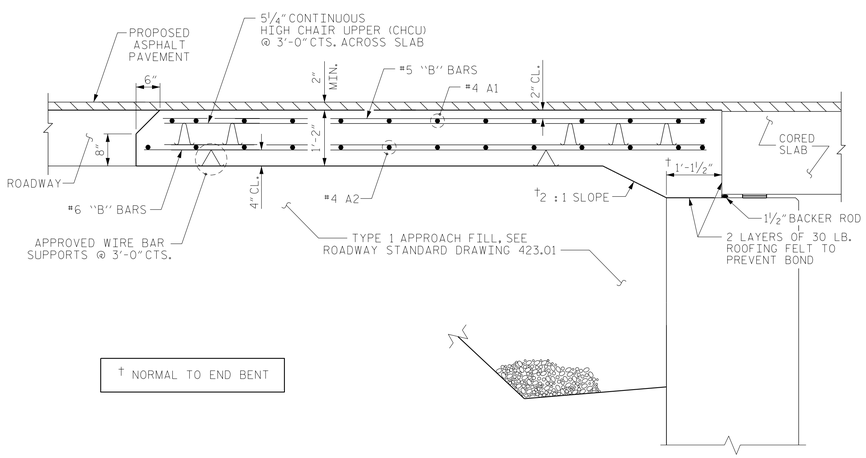

† NORMAL TO END BENT

SECTION THRU SLAB

SPLICE LENGTHS		
BAR SIZE	EPOXY COATED	UNCOATED
#4	1'-11"	1'-7"
#5	2'-5"	2'-0"
#6	3'-7"	2'-5"

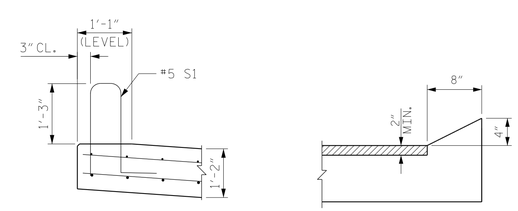

SECTION K-K

SECTION N-N

CURB DETAILS

PROJECT NO. BP11.R013

WILKES COUNTY

STATION: 13+63.00 -L-

SHEET 1 OF 2

STATE OF NORTH CAROLINA
DEPARTMENT OF TRANSPORTATION
RALEIGH

BRIDGE APPROACH SLAB FOR PRESTRESSED CONCRETE CORED SLAB UNIT (SUB-REGIONAL TIER)

90° SKEW

NORTH CAROLINA PROFESSIONAL SEAL 040377 ENGINEER T. R. LAWS 4/11/2025

RS&H

RS&H Architects-Engineers-Planners, Inc.
8521 Six Forks Road, Suite 400
Raleigh, NC 27615
919-926-4100 FAX 919-846-9080
www.rsandh.com
North Carolina License Nos. 50073 * F-0493 * C-28

REVISIONS						SHEET NO.
NO.	BY:	DATE:	NO.	BY:	DATE:	S-17
1			3			TOTAL SHEETS
2			4			18

DOCUMENT NOT CONSIDERED FINAL UNLESS ALL SIGNATURES COMPLETED

DRAWN BY :	M. R. ACOSTA	DATE :	11/2024
CHECKED BY :	T. R. LAWS	DATE :	11/2024
DESIGN ENGINEER OF RECORD:	T. R. LAWS	DATE :	03/2025

4/7/2025
\\rsandh.com\files\Transportation\P\10034238018_Div 11 Wilkes 280\Design\Structures\CAD\401_033_BP11.R013_SMU_AS_S-17_960280.dgn
ScaccaJ

NOTES

THE COST OF THE BARRIER RAIL ON THE APPROACH SLAB SHALL BE INCLUDED IN THE LINEAR FOOT CONTRACT PRICE BID FOR "VERTICAL CONCRETE BARRIER RAIL".

THE BARRIER RAIL ON EACH APPROACH SLAB SHALL NOT BE CAST UNTIL ALL APPROACH SLAB CONCRETE HAS BEEN CAST AND HAS REACHED A MINIMUM COMPRESSIVE STRENGTH OF 3,000 PSI.

ALL REINFORCING STEEL IN BARRIER RAILS SHALL BE EPOXY COATED.

BILL OF MATERIAL

BARRIER RAIL ONLY

BAR	NO.	SIZE	TYPE	LENGTH	WEIGHT
* B11	20	#5	STR	11'-8"	243
* S1	48	#5	1	5'-7"	280
* S2	40	#5	2	7'-2"	299
* S3	8	#5	2	5'-8"	47

* EPOXY COATED REINFORCING STEEL	869 LBS.
CLASS AA CONCRETE	4.1. C.Y.
CONCRETE BARRIER RAIL	24.0 LIN. FT.

BAR TYPES

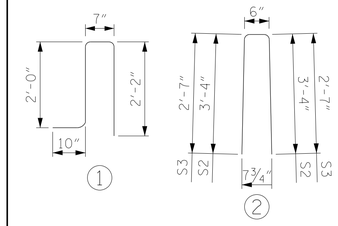

ALL BAR DIMENSIONS ARE OUT TO OUT

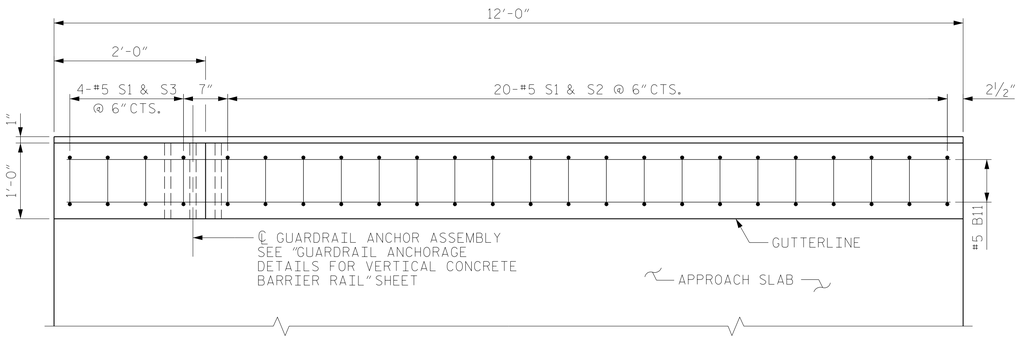

PLAN OF BARRIER RAIL @ END BENT 1

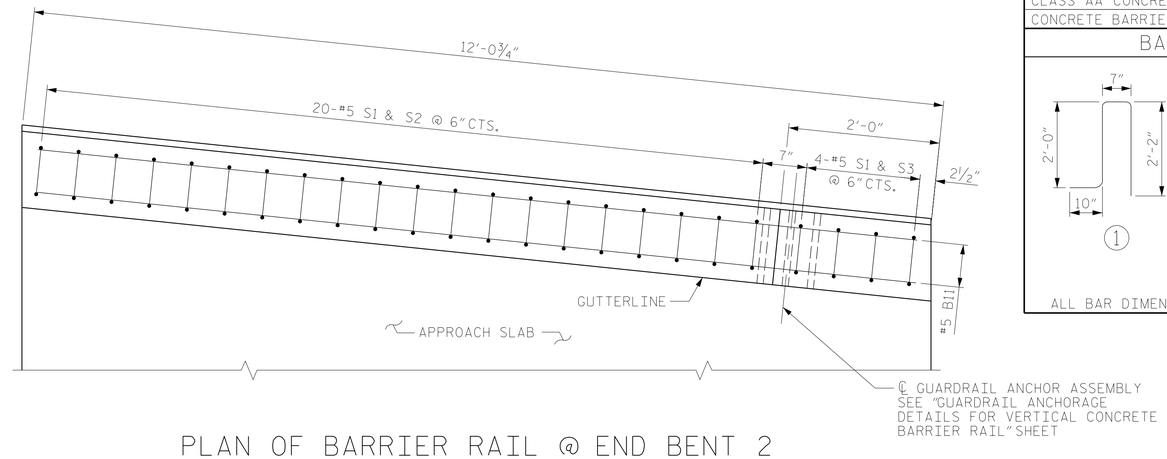

PLAN OF BARRIER RAIL @ END BENT 2

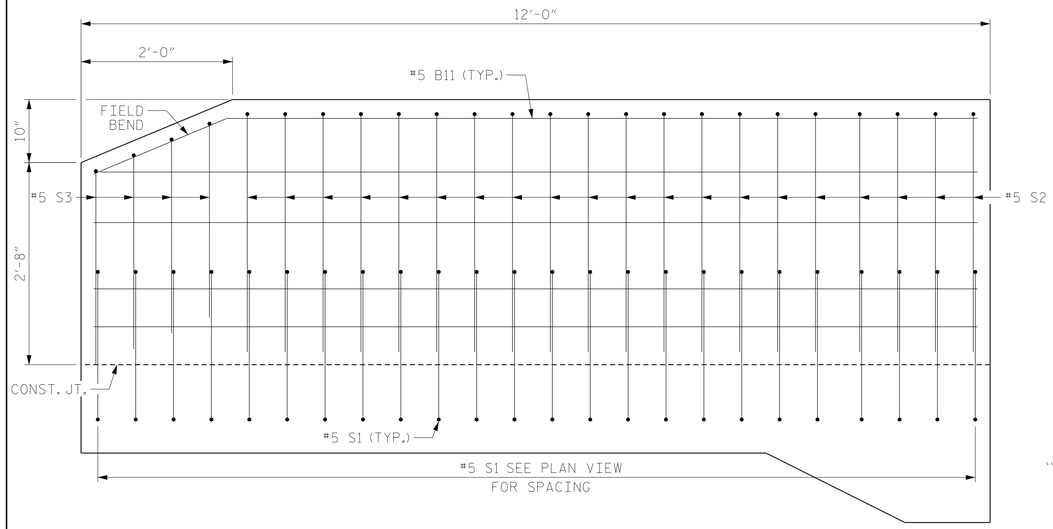

SIDE VIEW
(END BENT 1 SHOWN, END BENT 2 SIMILAR)

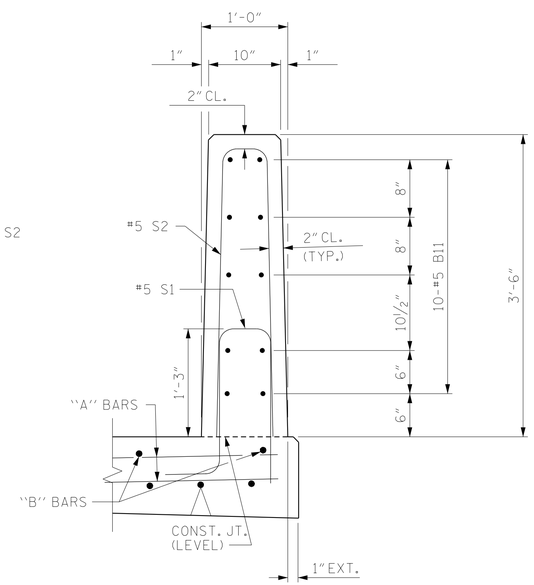

SECTION THRU RAIL

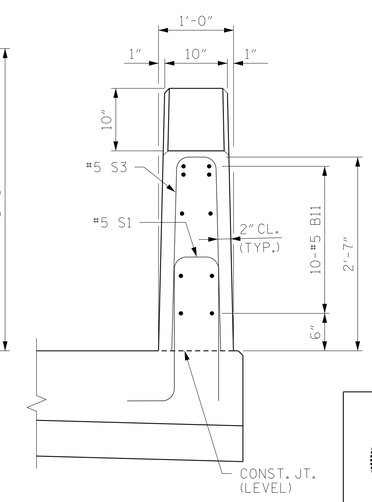

END VIEW

END OF RAIL DETAILS

PROJECT NO. BP11.R013
WILKES COUNTY
STATION: 13+63.00 -L-

SHEET 2 OF 2

NORTH CAROLINA PROFESSIONAL SEAL 040318 Laws TONY R. LAWS JR. ENGINEERING
4/11/2025

RS&H

RS&H Architects-Engineers-Planners, Inc.
8521 Six Forks Road, Suite 400
Raleigh, NC 27615
919-926-4100 FAX 919-846-9080
www.rsandh.com
North Carolina License Nos. 50073 * F-0493 * C-28

STATE OF NORTH CAROLINA
DEPARTMENT OF TRANSPORTATION
RALEIGH

APPROACH SLAB DETAILS

REVISIONS						SHEET NO.
NO.	BY:	DATE:	NO.	BY:	DATE:	S-18
1			3			TOTAL SHEETS
2			4			18

DOCUMENT NOT CONSIDERED FINAL UNLESS ALL SIGNATURES COMPLETED

DRAWN BY :	M. R. ACOSTA	DATE :	03/2025
CHECKED BY :	M. B. KHIN	DATE :	03/2025
DESIGN ENGINEER OF RECORD:	T. R. LAWS	DATE :	03/2025

4/7/2025
\\rsandh.com\files\Transportation\P\10034238018_Div 11 Wilkes 280\Design\Structures\CAD\401_035_BP11.R013_SMU_AS_S-18_960280.dgn
ScaccaJ

STANDARD NOTES

DESIGN DATA:

SPECIFICATIONS	AASHTO (CURRENT)
LIVE LOAD	SEE PLANS
IMPACT ALLOWANCE	SEE AASHTO
STRESS IN EXTREME FIBER OF STRUCTURAL STEEL - AASHTO M270 GRADE 36	20,000 LBS. PER SQ. IN.
- AASHTO M270 GRADE 50W	27,000 LBS. PER SQ. IN.
- AASHTO M270 GRADE 50	27,000 LBS. PER SQ. IN.
REINFORCING STEEL IN TENSION - GRADE 60	24,000 LBS. PER SQ. IN.
CONCRETE IN COMPRESSION	1,200 LBS. PER SQ. IN.
CONCRETE IN SHEAR	SEE AASHTO
STRUCTURAL TIMBER - TREATED OR UNTREATED EXTREME FIBER STRESS	1,800 LBS. PER SQ. IN.
COMPRESSION PERPENDICULAR TO GRAIN OF TIMBER	375 LBS. PER SQ. IN.
EQUIVALENT FLUID PRESSURE OF EARTH	30 LBS. PER CU. FT. (MINIMUM)

MATERIAL AND WORKMANSHIP:

EXCEPT AS MAY OTHERWISE BE SPECIFIED ON PLANS OR IN THE SPECIAL PROVISIONS, ALL MATERIAL AND WORKMANSHIP SHALL BE IN ACCORDANCE WITH THE 2024 "STANDARD SPECIFICATIONS FOR ROADS AND STRUCTURES" OF THE N. C. DEPARTMENT OF TRANSPORTATION.

STEEL SHEET PILING FOR PERMANENT OR TEMPORARY APPLICATIONS SHALL BE HOT ROLLED.

CONCRETE:

UNLESS OTHERWISE REQUIRED ON PLANS, CLASS A CONCRETE SHALL BE USED FOR ALL PORTIONS OF ALL STRUCTURES WITH THE EXCEPTION THAT: CLASS AA CONCRETE SHALL BE USED IN BRIDGE SUPERSTRUCTURES, ABUTMENT BACKWALLS, AND APPROACH SLABS; AND CLASS B CONCRETE SHALL BE USED FOR SLOPE PROTECTION AND RIP RAP.

CONCRETE CHAMFERS:

UNLESS OTHERWISE NOTED ON THE PLANS, ALL EXPOSED CORNERS ON STRUCTURES SHALL BE CHAMFERED 3/4" WITH THE FOLLOWING EXCEPTIONS: TOP CORNERS OF CURBS MAY BE ROUNDED TO 1 1/2" RADIUS WHICH IS BUILT INTO CURB FORMS; CORNERS OF TRANSVERSE FLOOR EXPANSION JOINTS SHALL BE ROUNDED WITH A 1/4" FINISHING TOOL UNLESS OTHERWISE REQUIRED ON PLANS; AND CORNERS OF EXPANSION JOINTS IN THE ROADWAY FACES AND TOPS OF CURBS AND SIDEWALKS SHALL BE ROUNDED TO A 1/4" RADIUS WITH A FINISHING STONE OR TOOL UNLESS OTHERWISE REQUIRED ON PLANS.

DOWELS:

DOWELS WHEN INDICATED ON PLANS AS FOR CULVERT EXTENSIONS, SHALL BE EMBEDDED AT LEAST 12" INTO THE OLD CONCRETE AND GROUTED INTO PLACE WITH 1:2 CEMENT MORTAR.

ALLOWANCE FOR DEAD LOAD DEFLECTION, SETTLEMENT, ETC. IN CASTING SUPERSTRUCTURES:

BRIDGES SHALL BE BUILT ON THE GRADE OR VERTICAL CURVE SHOWN ON PLANS. SLABS, CURBS AND PARAPETS SHALL CONFORM TO THE GRADE OR CURVE.

ALL DIMENSIONS WHICH ARE GIVEN IN SECTION AND ARE AFFECTED BY DEAD LOAD DEFLECTIONS ARE DIMENSIONS AT CENTER LINE OF BEARING UNLESS OTHERWISE NOTED ON PLANS. IN SETTING FORMS FOR STEEL BEAM BRIDGES AND PRESTRESSED CONCRETE GIRDER BRIDGES, ADJUSTMENTS SHALL BE MADE DUE TO THE DEAD LOAD DEFLECTIONS FOR THE ELEVATIONS SHOWN. WHERE BLOCKS ARE SHOWN OVER BEAMS FOR BUILDING UP TO THE SLAB, THE VERTICAL DIMENSIONS OF THE BLOCKS SHALL BE ADJUSTED BETWEEN BEARINGS TO COMPENSATE FOR DEAD LOAD DEFLECTIONS, VERTICAL CURVE ORDINATE, AND ACTUAL BEAM CAMBER. WHERE BOTTOM OF SLAB IS IN LINE WITH BOTTOM OF TOP FLANGES, DEPTH OF SLAB BETWEEN BEARINGS SHALL BE ADJUSTED TO COMPENSATE FOR DEAD LOAD DEFLECTION, VERTICAL CURVE ORDINATE, AND ACTUAL BEAM CAMBER.

IN SETTING FALSEWORK AND FORMS FOR REINFORCED CONCRETE SPANS, AN ALLOWANCE SHALL BE MADE FOR DEAD LOAD DEFLECTIONS, SETTLEMENT OF FALSEWORK, AND PERMANENT CAMBER WHICH SHALL BE PROVIDED FOR IN ADDITION TO THE ELEVATIONS SHOWN. AFTER REMOVAL OF THE FALSEWORK, THE FINISHED STRUCTURES SHALL CONFORM TO THE PROFILE AND ELEVATIONS SHOWN ON THE PLANS AND CONSTRUCTION ELEVATIONS FURNISHED BY THE ENGINEER.

DETAILED DRAWINGS FOR FALSEWORK OR FORMS FOR BRIDGE SUPERSTRUCTURE AND ANY STRUCTURE OR PARTS OF A STRUCTURE AS NOTED ON THE PLANS SHALL BE SUBMITTED TO THE ENGINEER FOR APPROVAL BEFORE CONSTRUCTION OF THE FALSEWORK OR FORMS IS STARTED.

REINFORCING STEEL:

ALL REINFORCING STEEL SHALL BE DEFORMED. DIMENSIONS RELATIVE TO PLACEMENT OF REINFORCING ARE TO CENTERS OF BARS UNLESS OTHERWISE INDICATED IN THE PLANS. DIMENSIONS ON BAR DETAILS ARE TO CENTERS OF BARS OR ARE OUT TO OUT AS INDICATED ON PLANS.

WIRE BAR SUPPORTS SHALL BE PROVIDED FOR REINFORCING STEEL WHERE INDICATED ON THE PLANS. WHEN BAR SUPPORT PIECES ARE PLACED IN CONTINUOUS LINES, THEY SHALL BE SO PLACED THAT THE ENDS OF THE SUPPORTING WIRES SHALL BE LAPPED TO LOCK LEGS ON ADJOINING PIECES.

STRUCTURAL STEEL:

AT THE CONTRACTOR'S OPTION, HE MAY SUBSTITUTE 7/8" Ø SHEAR STUDS FOR THE 3/4" Ø STUDS SPECIFIED ON THE PLANS. THIS SUBSTITUTION SHALL BE MADE AT THE RATE OF 3 - 7/8" Ø STUDS FOR 4 - 3/4" Ø STUDS, AND STUD SPACING CHANGES SHALL BE MADE AS NECESSARY TO PROVIDE THE SAME EQUIVALENT NUMBER OF 7/8" Ø STUDS ALONG THE BEAM AS SHOWN FOR 3/4" Ø STUDS BASED ON THE RATIO OF 3 - 7/8" Ø STUDS FOR 4 - 3/4" Ø STUDS. STUDS OF THE LENGTH SPECIFIED ON THE PLANS MUST BE PROVIDED. THE MAXIMUM SPACING SHALL BE 2'-0".

EXCEPT AT THE INTERIOR SUPPORTS OF CONTINUOUS BEAMS WHERE THE COVER PLATE IS IN CONTACT WITH BEARING PLATE, THE CONTRACTOR MAY, AT HIS OPTION, SUBSTITUTE FOR THE COVER PLATES DESIGNATED ON THE PLANS COVER PLATES OF THE EQUIVALENT AREA PROVIDED THESE PLATES ARE AT LEAST 5/16" IN THICKNESS AND DO NOT EXCEED A WIDTH EQUAL TO THE FLANGE WIDTH LESS 2" OR A THICKNESS EQUAL TO 2 TIMES THE FLANGE THICKNESS. THE SIZE OF FILLET WELDS SHALL CONFORM TO THE REQUIREMENTS OF THE CURRENT ANSI/AASHTO/AWS "BRIDGE WELDING CODE". ELECTROSLAG WELDING WILL NOT BE PERMITTED.

WITH THE SOLE EXCEPTION OF EDGES AT SURFACES WHICH BEAR ON OTHER SURFACES, ALL SHARP EDGES AND ENDS OF SHAPES AND PLATES SHALL BE SLIGHTLY ROUNDED BY SUITABLE MEANS TO A RADIUS OF APPROXIMATELY 1/16" OR EQUIVALENT FLAT SURFACE AT A SUITABLE ANGLE PRIOR TO PAINTING, GALVANIZING, OR METALLIZING.

HANDRAILS AND POSTS:

METAL STANDARDS AND FACES OF THE CONCRETE END POSTS FOR THE METAL RAIL SHALL BE SET NORMAL TO THE GRADE OF THE CURB, UNLESS OTHERWISE SHOWN ON PLANS. THE METAL RAIL AND TOPS OF CONCRETE POSTS USED WITH THE ALUMINUM RAIL SHALL BE BUILT PARALLEL TO THE GRADE OF THE CURB.

METAL HANDRAILS SHALL BE IN ACCORDANCE WITH THE PLANS. RAILS SHALL BE AS MANUFACTURED FOR BRIDGE RAILING. CASTINGS SHALL BE OF A UNIFORM APPEARANCE. FINS AND OTHER DEFORMATIONS RESULTING FROM CASTING OR OTHERWISE SHALL BE REMOVED IN A MANNER SO THAT A UNIFORM COLORING OF THE COMPLETED CASTING SHALL BE OBTAINED. CASTINGS WITH DISCOLORATIONS OR OF NON-UNIFORM COLORING WILL NOT BE ACCEPTED. CERTIFIED MILL REPORTS ARE REQUIRED FOR METAL RAILS AND POSTS.

SPECIAL NOTES:

GENERALLY, IN CASE OF DISCREPANCY, THIS STANDARD SHEET OF NOTES SHALL GOVERN OVER THE SPECIFICATIONS, BUT THE REMAINDER OF THE PLANS SHALL GOVERN OVER NOTES HEREON, AND SPECIAL PROVISIONS SHALL GOVERN OVER ALL. SEE SPECIFICATIONS ARTICLE 105-4.